Vokèra BY RIELLO

evolve

High efficiency system boiler

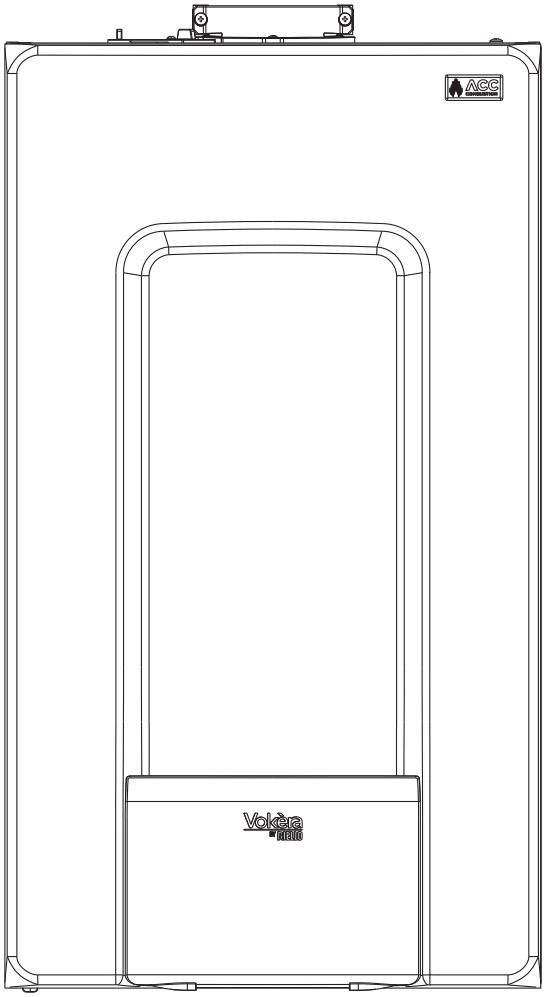

Users Instructions

Installation & Servicing Instructions

CE

evolve 18S G.C. N° 41-094-98
evolve 24S G.C. N° 41-094-99
evolve 30S G.C. N° 41-364-01
evolve 35S G.C. N° 41-364-02

THESE INSTRUCTIONS
TO BE RETAINED
BY USER

benchmark COLLECTIVE MARK
THE MARK OF QUALITY FOR THE INSTALLATION, COMMISSIONING AND SERVICING OF DOMESTIC HEATING AND HOT WATER SYSTEMS

Vokèra is a licensed member of the Benchmark scheme which aims to improve the standards of installation and commissioning of domestic hot water systems in the UK.

1. THINGS YOU SHOULD KNOW....2
2. GETTING STARTED....5
3. HOW TO....11
4. WHAT IF....12
SECTION 1 - DESIGN PRINCIPLES AND OPERATING SEQUENCE....14
SECTION 2 - TECHNICAL DATA....15
SECTION 3 - CONTROL PANEL (REC10)....18
SECTION 4 - GENERAL REQUIREMENTS (UK)....24
SECTION 4A - GENERAL REQUIREMENTS (EIRE)....25
SECTION 5 - INSTALLATION....27
SECTION 6 - COMMISSIONING....32
SECTION 7 - SERVICING INSTRUCTIONS....46
SECTION 8 - CHECKS, ADJUSTMENTS AND FAULT FINDING....53
SECTION 9 - LPG INSTRUCTIONS....60
Commissioning checklist....61
Benchmark....62-64

RANGE RATED
This boiler can be adapted to the heat requirements of the system, and in fact it is possible to set the range rated parameter as shown in the specific paragraph.
After setting the desired output report the value in the table on the back cover of this manual, for future references.

USERS INSTRUCTIONS

INTRODUCTION

Dear Customer

Your Vokèra **evolve** boiler has been designed to meet and exceed the very latest standards in gas central heating technology, and if cared for, will give years of reliable use and efficiency.
Please therefore take some time to read these instructions carefully.

Do's and Don't's

- **Do** ensure that the system pressure is periodically checked
- **Do** ensure that the boiler is not used by children or unassisted disabled people
- **Do** ensure that you know how to isolate the appliance in an emergency
- **Do** ensure that you are familiar with the appliance controls
- **Do** ensure that your installer has completed the appliance log book section
- **Do not** attempt to remove the appliance casing or gain internal access
- **Do not** hang clothes etc. over the appliance
- **Do not** forget to have the appliance serviced annually.

This booklet is an integral part of the appliance. It is therefore necessary to ensure that the booklet is handed to the person responsible for the property in which the appliance is located/installed.
A replacement copy can be obtained online from www.vokera.co.uk & www.vokera.ie.

1. THINGS YOU SHOULD KNOW

1.1 GAS APPLIANCES

Gas Safety (Installation and Use) Regulation (UK).
In the interests of your safety and that of others it is a legal requirement that all gas appliances are installed and correctly maintained by a competent person and in accordance with the latest regulations.

1.2 ELECTRICAL SUPPLY

Please ensure that this appliance has been properly connected to the electrical supply by means of a double pole isolator or un-switched socket, and that the correct size of fuse (3 AMP) has been fitted.
Warning: this appliance must be earthed!

1.3 WARRANTY REGISTRATION

Please take the time to register the appliance warranty using the documentation provided, call 0800 479 0754 (UK) or 056 7755055 to obtain your warranty confirmation code (please have your appliance warranty card to hand).

1.4 APPLIANCE COMMISSIONING CHECKLIST (UK only)

The Benchmark checklist section can be found at the rear of the appliance installation booklet. This important document must be completed during the installation/commissioning of your boiler. All GAS SAFE registered installers carry a GAS SAFE ID card, and have a registration number. These details should be recorded in the Benchmark commissioning checklist section within the installation booklet. You can check your installers details by calling GAS SAFE direct on 08004085500. Failure to install and commission the appliance in accordance with the manufacturers instructions will invalidate the warranty. This does not affect your statutory rights.

1.5 HOW DOES IT WORK?

Your **evolve** boiler supplies heated water to your radiators and hot water to your hot water taps. The central heating is controlled via a time clock and any thermostats that your installer may have fitted. The boiler will light when it receives a request from the time clock via any thermostat that may be installed. Your **evolve** boiler lights electronically and does not have a pilot light. In the unlikely event of a fault developing with your boiler, the supply of gas to the burner will be terminated automatically.

1.6 DIMENSIONS

evolve	**18S - 24S**	**30S - 35S**
HEIGHT	740 mm	740 mm
WIDTH	420 mm	420 mm
DEPTH	275 mm	350 mm

1.7 CLEARANCES REQUIRED

ABOVE	100mm*
BELOW	100mm^
LEFT SIDE	2mm
RIGHT SIDE	2mm**
FRONT	4mm***

* 100mm if rear-flue outlet is used or 25mm above flue bend if top flue outlet is used. Consideration should be given to providing reasonable clearance for the insertion of a FGA probe.

** Disconnection of adjacent components may be required in order to facilitate syphon removal.

*** Provided that a door or removal panel enables 450mm access for maintenance.

^ Can be reduced to 5mm if a removal panel enables 100mm for maintenance.

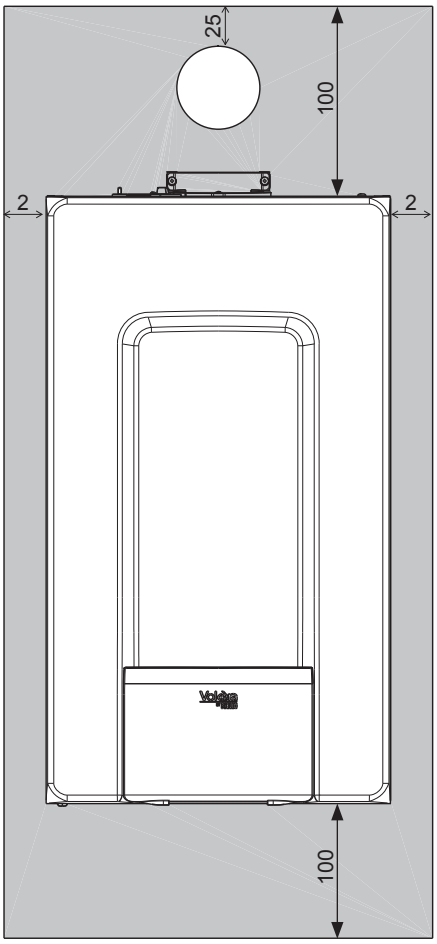

1.8 FROST PROTECTION SYSTEM

The **evolve** is equipped with a built-in frost protection system, this enables the boiler to over-ride the time controls – even if switched off – and operate the burner and/or pump, should the temperature within the appliance drop below 5 °C. Please note that the frost protection system is designed to protect the appliance only, should frost protection be required for the heating system, additional controls may be required.

NOTE

The frost protection system is reliant on the appliance having a permanent electrical supply, and being in a non-fault condition.

1.9 APPLIANCE STATUS INDICATORS

Your appliance incorporates the REC 10 UI (User Interface), that displays information on appliance status and condition.

CONTROL PANEL (REC10)

Depending on the type of application, some of the functions described in this manual might not be available.

The REC 10 UI is a multi-functional control that enables you to view the operating status of your appliance at a glance; and is also used to adjust/set the various 'User' settings, including temperature set-points.

The REC 10 UI also incorporates an embedded timer that - if enabled - can be used to program and control the ON/OFF times for your central heating. Please consult you installer for further advice on this function.

The REC 10 UI features a backlit liquid crystal display.

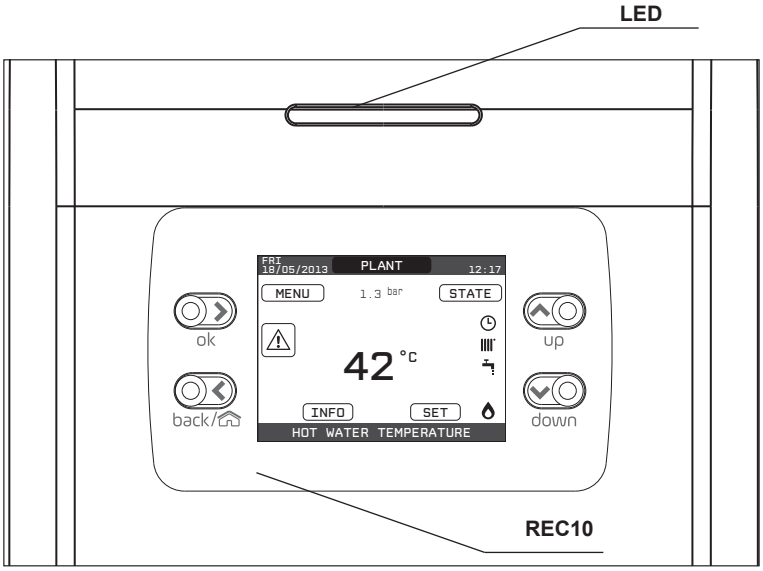

Fig. 1

LED		Light signal indicating the operating status of the boiler. Can be red or green (see specific paragraph)
REC10		Boiler control panel
Key area	ok	ok= confirm
	back/	back= return to the previous screen cancel selection return to the main screen (press > 2 sec.)
	up	up= allows you to choose between the options PLANT-STATE-SET-INFO-MENU and to surf through the submenus scrolling upwards
	down	down= allows you to choose between the options PLANT-STATE-SET-INFO-MENU and to surfe through the submenus scrolling down

System Icons may appear on both the left and right of the display; and they signify the following condition/status:

	This icon indicates that the OFF operating status mode has been set. Each ignition request is ignored except for the frost-protection function. The pump anti-lock and frost-protection function remain active.
	This icon indicates that WINTER mode has been selected (HEATING function enabled). If a heating request from the main zone is in progress, the icon will be flashing.
	This icon indicates that the circuit for domestic hot water production is enabled. When a domestic hot water request is in progress, the icon flashes (default value - parameter: "water tank type = 0").
	When the "central heating programming timing" is enabled this icon indicates that the system heating (main zone) is in AUTOMATIC mode (the management of the heating requests follows what has been set with the timer). If the heating function is not enabled during the current time frame, the icon will be crossed out.
	When the "central heating programming timing" is enabled this icon indicates that the system heating (main zone) is in MANUAL mode (the management of the heating requests does not follow what has been set with the programming timing, but it is always active).
OFF	This icon indicates that the system (main zone) has been set to off (not active).
	This icon indicates that the system is detecting the presence of a flame.
	This icon indicates the presence of an anomaly or fault condition, and is always flashing.

Note:

The temperature of the heating outlet sensor is shown at the centre of the main screen. The value's meaning is indicated at the bottom of the display.

Whenever a heating request is in progress, the value displayed at the centre of the screen refers to the system's flow sensor, with the relative indication.
The value expressed in bar refers to the system's water pressure.

The top of the screen shows the current date and time, as well as the outdoor temperature, if available.

2. GETTING STARTED

2.1 BEFORE SWITCHING ON

Before switching the appliance on, please familiarise yourself with:
- how to isolate the appliance from the gas, water, and electricity supplies;
- how to check and top-up – if necessary – the system water pressure;
- any external thermostats and their functions;
- the appliance controls.

2.2 APPLIANCE CONTROLS (see fig. 1)

The appliance controls are concealed behind the front flap of the appliance.

NOTE

The appliance frost protection is active in all the boiler modes.
The **control panel functions** can be used to vary the temperature of the water that circulates around your radiators and the water that flows from your hot water taps.
The heating temperature range can be adjusted between 20C - 40C (low temperature) or 40C - 80C (high temperature) this range is configured by your installer and the default is the high temperature range.

Refer to the main appliance status table for fault indicator and boiler status.

2.3 LIGHTING THE BOILER

Ensure the gas and electrical supply to the boiler are turned on.
After completing all operations required to prepare commissioning, proceed as follows to start the boiler.

2.4 START SCREEN

When the appliance is first connected to the electrical supply, the REC 10 may require you to set the time and date (see 2.9.1), and the appliance will enter its 'pre-purge' mode that will last for several minutes. On completion of the 'pre-purge' phase, the appliance will enter its 'standby' mode unless a heating or HW request has been made.

By pressing the **"up"** and **"down"** keys it is possible to move the selection of the functions in this order:
- PLANT
- STATE
- SET
- INFO
- MENU.

By pressing the **"ok"** key you can access the settings of the selected function (except for PLANT).
The **"back"** key is inactive (except for PLANT).

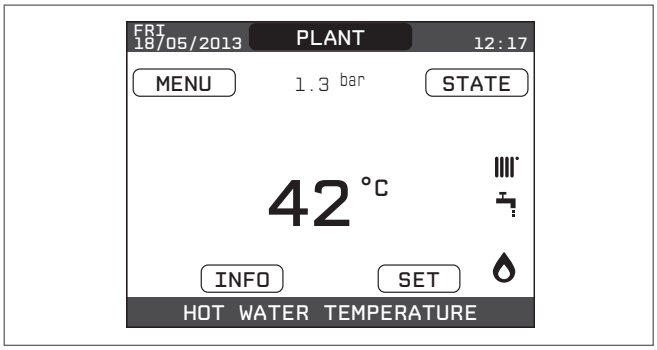

2.5 PLANT

The PLANT menu only becomes available if additional zones have been added and configured with this system via the REC10 H.

In order to change zones (see above), highlight PLANT if necessary pressing the **"up"** and **"down"** keys.

Then, pressing the **"ok"** and **"back"** keys, it will be possible to select the other zones in this sequence (only if added and configured with the REC10 H):
- PLANT
- MAIN ZONE
- ZONE 1
- ZONE 2.

The TIME AND DATE, LANGUAGE and BACKLIGHT settings are are related to the appliance only.
The information contained in the INFO menu is related to the appliance.
No domestic hot water parameters can be set if MAIN, ZONE 1 or ZONE 2 is selected.

2.6 STATE

The **STATE** function can be used to set the **BOILER** and **MAIN ZONE** operating modes.
To do this, it is necessary to highlight the desired entry using the **"up"** and **"down"** keys and then pressing **"ok"** to confirm the selection.
Pressing **"back"** takes you back to the initial screen without making any selection.

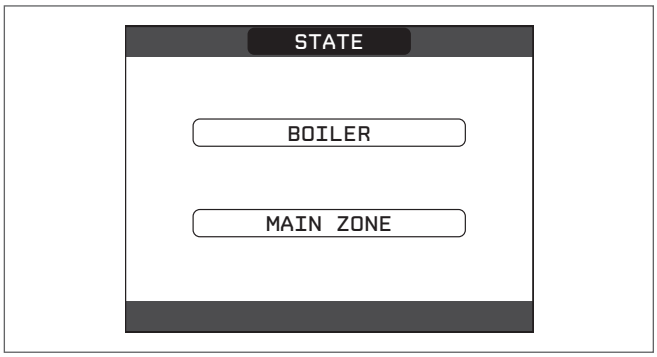

2.6.1 Boiler

This function can be selected in order to set the boiler's status, by choosing one of the following options:
- OFF
- WINTER.

The highlighted status is that which is currently selected. In order to select a different status highlight it using the **"up"** and **"down"** keys and then press **"ok"** to confirm the selection.
Once the selection has been validated, the display returns to the **STATE** screen.
Press **"back"** to return to the start screen without making any selection.

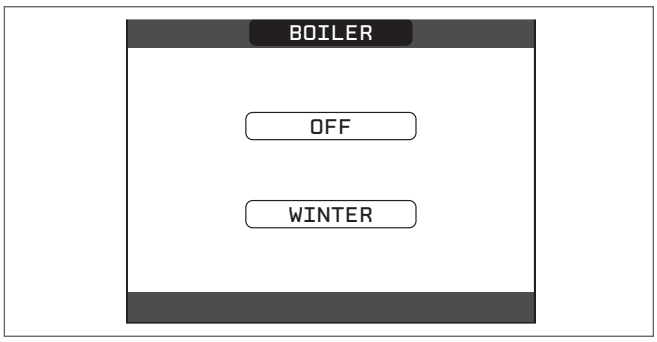

OFF: if **OFF** is selected, the system enters the standby mode, whereby only the standby functions remain active.

WINTER: if **WINTER** is selected, the system activates the boiler to heat the hot water and/or the central heating.

2.6.2 Main zone

Selecting this function allows you to set the main zone's status, by choosing one of the following options:

- if the embedded time clock is disabled (default):
  - ZONE ON: boiler responds to heating request
  - ZONE OFF: boiler does not respond to any request for heating

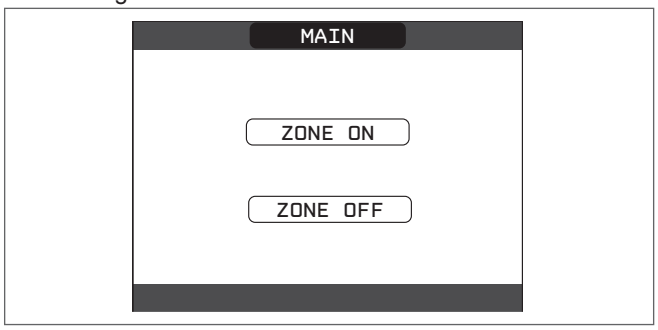

- if the embedded time clock has been enabled:
  - AUTO
  - MANUAL
  - HEAT OFF.

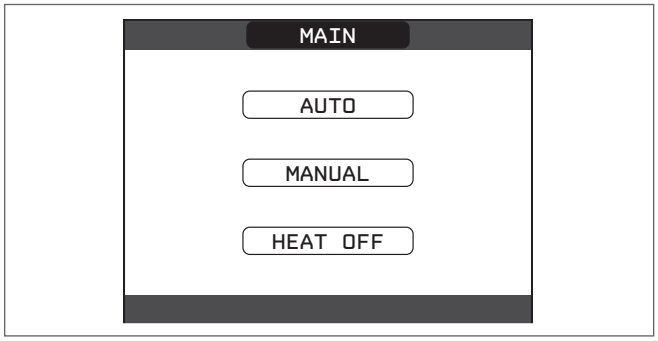

In order to select a different status highlight it using the **"up"** and **"down"**keys and confirm the selection by pressing **"ok"**. Once the selection has been validated, the display returns to the **STATE** screen.
Press **"back"** to return to the **STATE** screen without making any selection.

ON: if **ON** is selected, the zone heating requests are met.

AUTO: if **AUTO** is selected, the zone heating requests will be managed based on the scheduled programme.

MANUAL: if **MANUAL** is selected, the zone requests will be managed based on the selection set by the user.

HEAT OFF: If **HEAT OFF** is selected, the zone heating requests will be ignored.

NOTE: if you want to deactivate the zone in WINTER, you must select the required season (WINTER in the BOILER menu) and set the zone concerned to OFF.

2.7 SET

With the SET function it is possible to configure the HEATING setpoints.
To do this, it is necessary to highlight the desired entry using the **"up"** and **"down"** keys and then pressing **"ok"** to confirm the selection. Pressing **"back"** takes you back to the initial screen without making any selection.

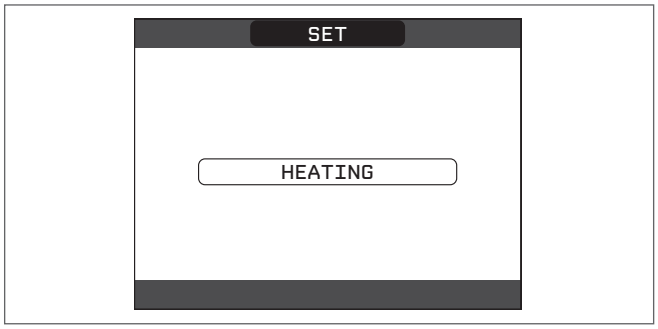

2.7.1 Heating

Press the **"up"** and **"down"** keys to change the heating setpoint temperature and confirm the selection by pressing **"ok"**. Press **"back"** to return to the **SET** screen without making any selection.

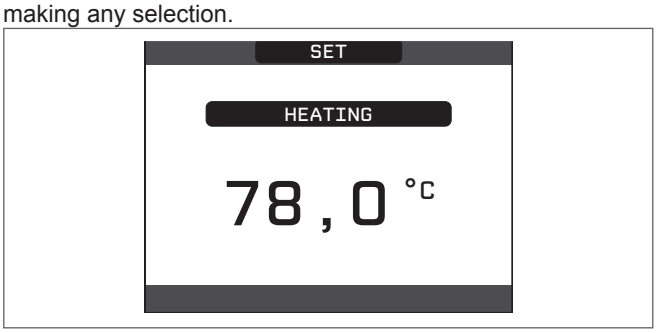

When an outdoor temperature sensor is installed, the outlet setpoint temperature is automatically adjusted by the system, in order to maintain the ambient temperature according to any variations in the outdoor temperature. If you want to adjust the outlet temperature, raising it or lowering it with respect to that automatically calculated by the boiler, it is possible to change the HEATING setpoint selecting the desired comfort level within the range (-5 ÷ +5).
The user is then asked to confirm the setpoint setting: select **CONFIRM** or **CANCEL** using the **"up"** and **"down"** keys, and confirm the selection pressing **"ok"**.
Once the selection is confirmed, the display returns to the **SET** screen.
If the selection is cancelled or the **"back"** key is pressed you return to the previous **SET** screen.

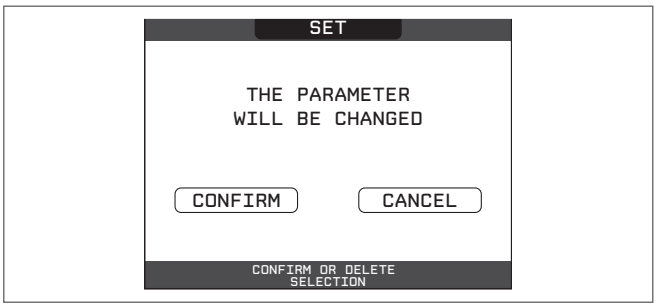

2.8 INFO

The **INFO** function can be used to display a series of data regarding the system.

ATTENTION - The displayed data is for information only and cannot be modified.

Press the **"up"** and **"down"** keys to go through the list of information available, in this order:

- SCREED HEATER OPERATING HOURS (*)
- CH PROBE
- RETURN PROBE
- EXHAUST PROBE
- OUTDOOR TEMPERATURE SENSOR (*)
- EXT T FOR THERMOREG (*)
- FAN SPEED
- ZONE 1 DELIVERY (*)
- ZONE 2 DELIVERY (*)
- EXHAUST PROBE HOURS
- MAIN ZONE SET-POINT
- SET MAIN ZONE
- ZONE 2 SET-POINT (*)
- WATER PRESSURE.

The **"ok"** key is inactive.

The **"back"** key allows you to return to the initial screen.

(*) In the absence of additional zones or if the screed heater function is not operating, the relative information will not be displayed.

2.9 MENU

Using the MENU it is possible to access the configuration of the SETTINGS and the TIME SCHEDULE (available only if the embedded timer is enabled (POR=1).
To do this, it is necessary to highlight the desired entry using the **"up"** and **"down"** keys and then pressing **"ok"** to confirm the selection.
Pressing **"back"** takes you back to the initial screen without making any selection.

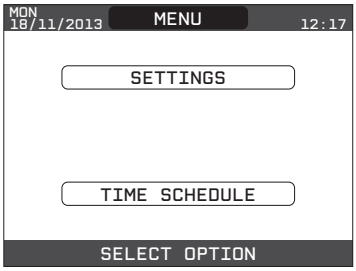

2.9.1 Settings

Select this function to modify the following settings:
- TIME AND DATE
- LANGUAGE
- BACKLIGHT.

To access the desired setting, it is necessary to highlight it using the **"up"** and **"down"** keys and then pressing **"ok"** to confirm the selection.
Press **"back"** to return to the start screen without making any selection.

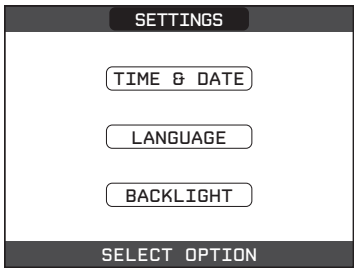

TIME AND DATE
Press **"ok"** to highlight in sequence HOURS, MINUTES, DAY, MONTH, YEAR and press the **"up"** and **"down"** keys to change the desired values.
Once the sequence has finished by pressing **"ok"**, the settings will be saved and the display will return to the initial screen.
By pressing **"back"** at any time the system will return to the **SETTINGS** cancelling the changes that were made.

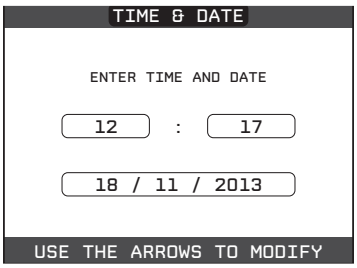

LANGUAGE
Press the **"up"** and **"down"** keys to select the desired language.
Pressing **"ok"** the language selection is confirmed and the display returns to the initial screen.
Pressing **"back"** the system returns to the **SETTINGS** screen without changing the system's language.

BACKLIGHT
The screen saver display (backlight off) is automatically activated when the time, that has been set in parameter \ MENU \ SETTINGS \ BACKLIGHT, elapsed without having pressed any buttons.
In the screen saver the current time is normally displayed.
"🔧" symbol and the number of days to STOP appear if the AUTOSTOP function is active.
When there is a heat request, the current time is replaced with the boiler flow temperature and turns on the icon concerning the type of request in progress.
A system efficiency indicator is also displayed at the top of the screen:
- HIGH EFFICIENCY (if the average value of the return probe > 55°C)
- OPTIMUM EFFICIENCY (if average value of the return probe < 55°C).

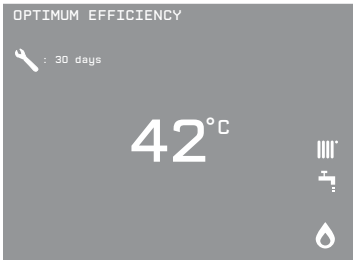

2.9.2 Time schedule

This function can only be selected if the embedded clock has been enabled (POR=1), it is possible to change the following:
- MAIN.

To access the desired timer programme, it is necessary to highlight the relevant zone, e.g. MAIN, using the **"up"** and **"down"** keys and then pressing **"ok"** to confirm the selection.
Press **"back"** to return to the start screen without making any selection.
For a detailed description of the scheduled programming timer, please refer to the section *"2.10 TIME SCHEDULE"*.

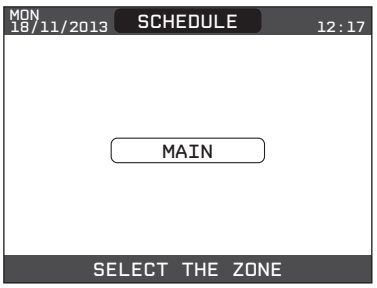

2.10 TIME SCHEDULE

Select the desired day using the **"up"** and **"down"** keys.
A table will be displayed indicating the day and the time settings that have been pre-programmed. Press **"ok"** to access the programming for the selected day.
Pressing **"back"** takes you back to the initial screen without making any selection.

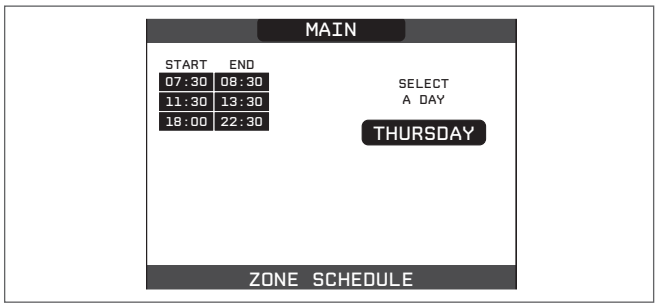

Once the selection has been made, the user can choose from among the following options:
- ADD: you can add up to four start & end periods
- MODIFY
- DELETE
- COPY.

2.10.1 Add

This function serves to add a new time frame to the selected day (up to a maximum of 4).
Press **"ok"** to select the function, after having highlighted it (if necessary) using the **"up"** and **"down"** keys.

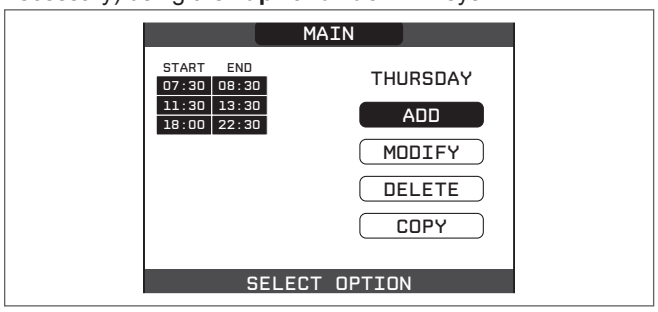

Press the **"up"** and **"down"** keys to increase or decrease by 30 minutes the **start** time and press **"ok"** to confirm the selection.

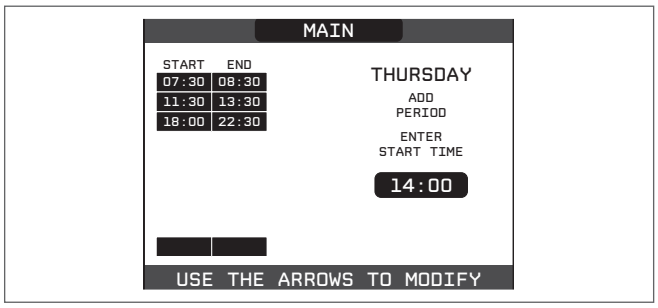

Press the **"up"** and **"down"** keys to increase or decrease by 30 minutes the **end** time and press **"ok"** to confirm the selection.

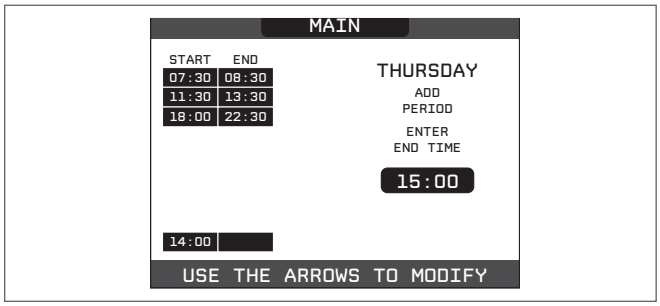

In order to confirm that the operation has been completed successfully, the display will show the table with the new time frame flashing.

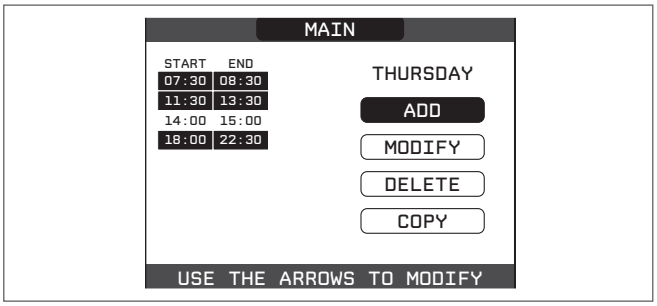

2.10.2 Modify

This function serves to edit a time frame already present for the selected day.
Press **"ok"** to select the function, after having highlighted it (if necessary) using the **"up"** and **"down"** keys.

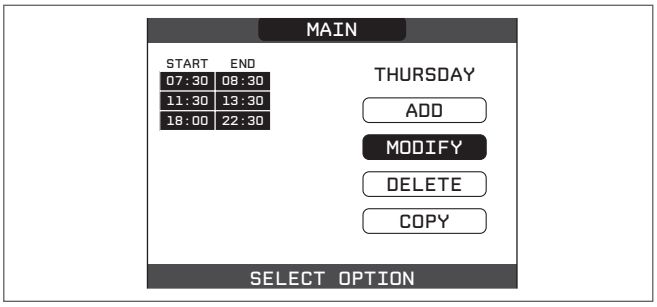

Press the **"up"** and **"down"** keys to select the desired time band and press **"ok"** to confirm the selection.

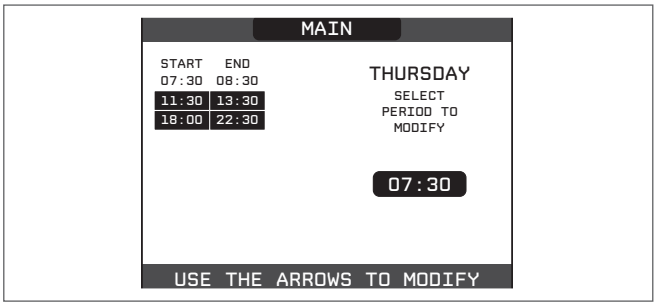

Press the **"up"** and **"down"** keys to increase or decrease by 30 minutes the **start** time and press **"ok"** to confirm the selection.

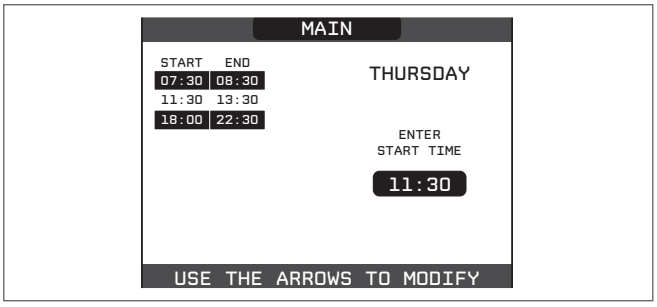

Press the **"up"** and **"down"** keys to increase or decrease by 30 minutes the **end** time and press **"ok"** to confirm the selection.

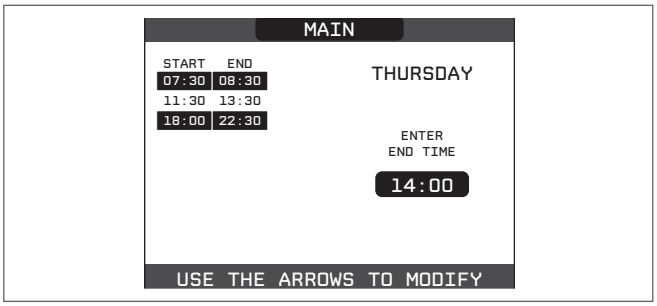

In order to confirm that the operation has been completed successfully, the display will show the table with the new time frame flashing.

At this point the user can select a new time frame to be modified, or else can press **“back”** to return to the previous **TIME SCHEDULE** screen.

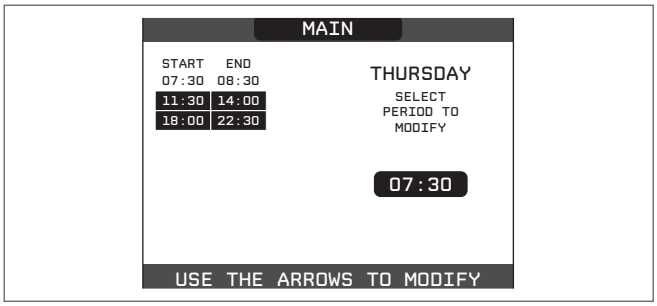

2.10.3 Delete

This function serves to delete a time frame already present for the selected day.
Press **“ok”** to select the function, after having highlighted it (if necessary) using the **“up”** and **“down”** keys.

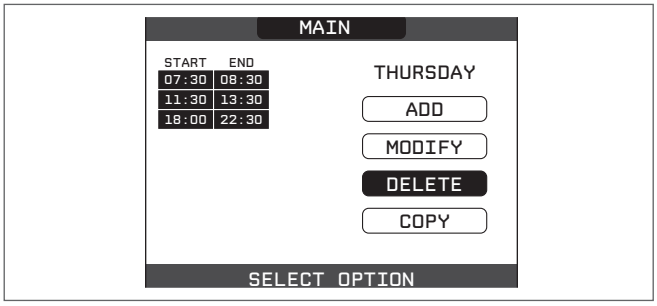

Press the **“up”** and **“down”** keys to select the desired time band and press **“ok”** to confirm the selection.

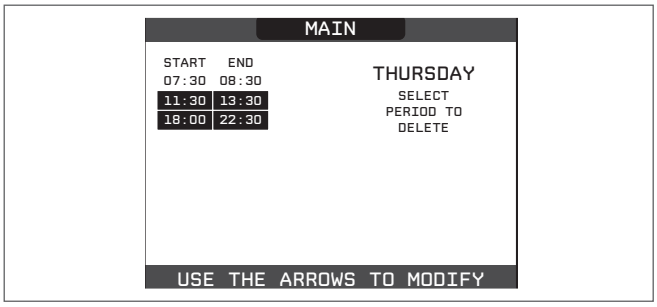

To confirm or cancel the selection made, highlight the corresponding option and confirm it by pressing **“ok”**.
In order to confirm that the operation has been completed successfully, the display will show the table with the selected time frame flashing just before deleting it from the table.

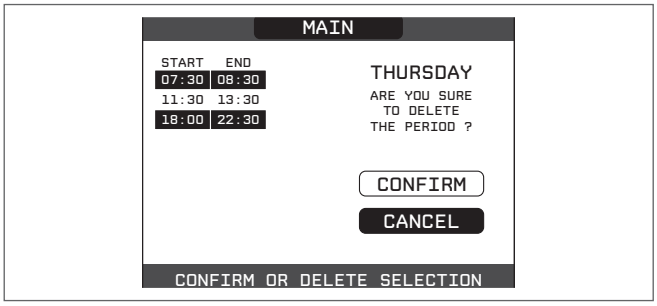

2.10.4 Copy

This function serves to copy the same scheduled programme for other days of the week.
Press **“ok”** to select the function, after having highlighted it (if necessary) using the **“up”** and **“down”** keys.

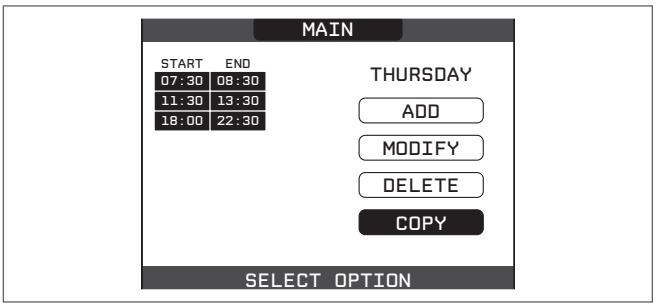

Press the **“up”** and **“down”** keys to select the day on which to copy the hourly schedule to and press **“ok”** to confirm the selection.

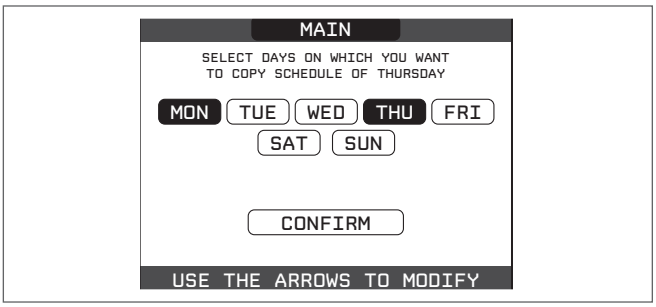

The day will be highlighted and others can be selected using the same procedure.
When finished highlight **CONFIRM** and press **“ok”**.

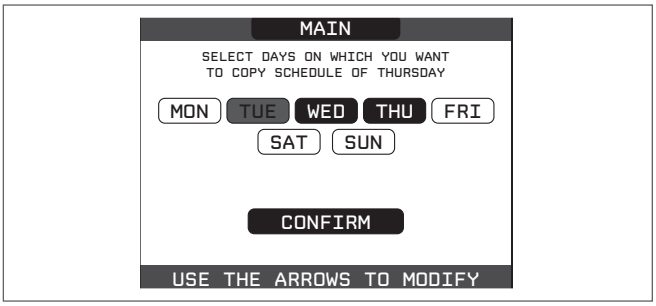

In order to confirm that the operation has been completed successfully, the display will show the list of days to which the scheduled programme has been copied.

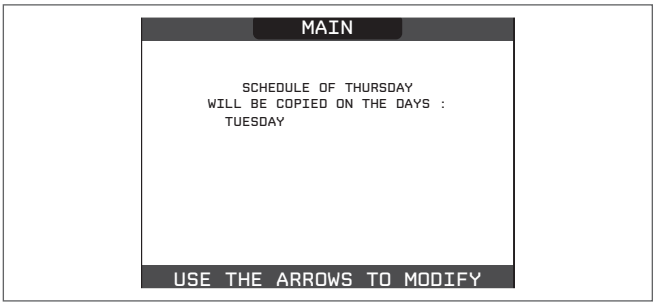

2.11 FAULTS

Should a fault occur, a screen will appear on the display indicating the relative error code and a brief alphanumeric description of the fault. Pressing the **“back”** button it is possible to return to the main screen, where a fault is signalled by this flashing icon ⚠.

The user can return to the fault description screen by using the **“up”** and **“down”** keys and then pressing the **“ok”** key. The faults description screen is automatically displayed once the display illumination time has elapsed without any button being pressed.
Press the **“up”** and **“down”** keys to display the descriptions of any other faults that may be present.

Boiler faults list

ERROR CODE	ERROR MESSAGE	RED LED	GREEN LED	RED and GREEN	DESCRIPTION OF ALARM TYPE
E010	flame lockout/ACF electronic fault	ON			final
E011	extraneous flame	flashing 0.2 sec. on/0.2 off			temporary
E020	limit thermostat	flashing 0.5 sec. on/0.5 off			final
E030	fan fault	ON			final
E040	water transducer - check system water pressure			ON	final
E041	water transducer - check system water pressure		flashing 0.5 sec. on/0.5 off		temporary
E042	water transducer fault			ON	final
E060	configuration fault			flashing 0.5 sec. on/0.5 off	temporary
E070	fault flow sensor/overtemperature flow sensor/ flow/return sensor differential alarm	ON			temporary/final/ final
E077	main zone water thermostat	ON			temporary
E080	fault return line probe/return line probe overtemperature/ outlet/return line probe differential alarm	ON			temporary/final/ final
E090	fault flue gases probe/ flue gases overtemperature probe			flashing 0.5 sec. on/0.5 off	temporary final
E091	clean primary heat exchanger			flashing 0.5 sec. on/0.5 off	temporary
--	water pressure low - check the system		flashing 0.5 sec. on/0.5 off		temporary
--	water pressure high - check the system		flashing 0.5 sec. on/0.5 off		temporary
--	boiler board communication lost	ON			temporary
--	BUS 485 communication lost	ON			temporary

List of combustion faults

ERROR CODE	ERROR MESSAGE	LED RED	LED GREEN	DESCRIPTION OF TYPE OF ALARM
E021	iono alarm	ON		These are temporary alarms that if they occur 6 times in an hour they become definitive; the alarm E097 is displayed and is followed by post-purging for 45 seconds at the fan's maximum speed. It is not possible to release the alarm before the end of the post-purging unless the boiler's power supply is switched off.
E022	iono alarm	ON		
E023	iono alarm	ON		
E024	iono alarm	ON		
E067	iono alarm	ON		
E088	iono alarm	ON		
E097	iono alarm	ON		
E085	combustion fault/high CO	ON		These are temporary alarms that if they occur 3 times in an hour they become definitive; the last error to occur is displayed and is followed by a post-purging of 5 minutes at the fan's maximum speed. It is not possible to release the alarm before the end of the post-purging unless the boiler's power supply is switched off.
E094	combustion fault/high CO	ON		
E095	combustion fault/high CO	ON		
E058	mains voltage fault	ON		These are temporary faults that restrict the ignition cycle.
E065	current modulation alarm	ON		
E086	obstruction fumes alarm	ON		Temporary fault reported during the post ventilation. It is maintained a post ventilation of 5 min at maximum fan speed.

Warning lights

BOILER STATUS	RED LED	GREEN LED	RED and GREEN	NOTES
Power-on			flashing 0.5 sec. on/ 0.5 sec. off	The red and green LEDs come on at the same time
Vent cycle	flashing 0.5 sec. on/ 1 sec. off	flashing 0.5 sec. on/ 1 sec. off		The red and green LEDs come sequentially one at a time
OFF status		flashing 0.3 sec. on/ 0.5 sec. off		
No heat request (stby)		flashing 0.3 sec. on/ 0.5 sec. off		
Transitional ignition/ overtemperature		flashing 0.3 sec. on/ 0.5 sec. off		
Presence of flame		ON		
Chimney sweep		ON		Only if the flame is present
Screed heater	flashing 1 sec.on/ 1 sec. off	flashing 1 sec.on/ 1 sec. off		The red and green LEDs come on alternately

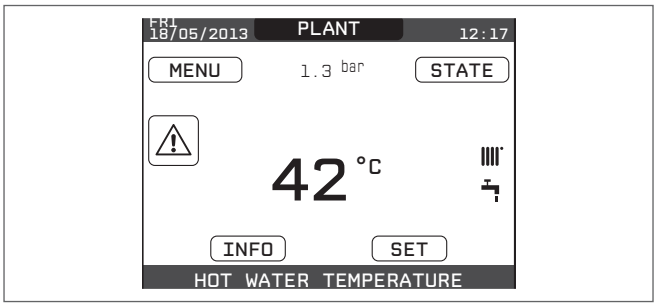

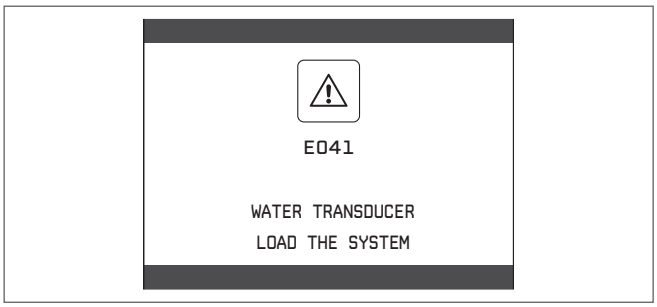

For fault E041
If the pressure drops below the safety threshold of 0.3 bar the boiler displays the fault code “E041 - WATER TRANSDUCER LOAD THE SYSTEM” for a transitional time of 10 min during which it is possible to open the external filling tap until the pressure is between 1 and 1.5 bar.

⚠ If the pressure drops frequently, contact the Technical Assistance Centre.

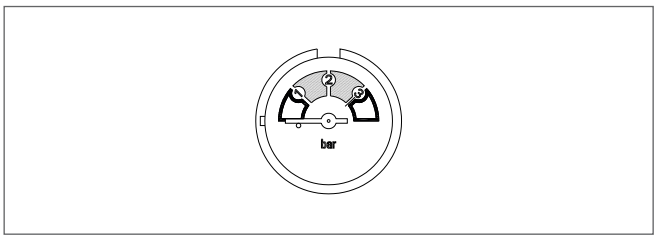

For fault E091
The boiler has an auto-diagnostic system which, based on the total number of hours in certain operating conditions, can signal the need to clean the primary heat exchanger. The intervention of the Technical Assistance Centre is necessary.

3. HOW TO...

3.1 HOW TO TOP-UP THE SYSTEM PRESSURE

The system pressure must be checked periodically to ensure the correct operation of the boiler. The system pressure is shown at the top of the LCD display or can be read on the gauge located on the underside of the appliance. When the boiler is at room temperature, the system pressure should be approximately 1.0 bar.
If the pressure requires ‘topping-up’ use the following instructions as a guide.

- Locate the filling valve connections (usually beneath the boiler, see fig. 1).
- Attach the filling loop to both connections.
- Open the filling valve slowly until you hear water entering the system.
- Close the filling valve when the pressure gauge (on the boiler) reads between 1 and 1.5 BAR.
- Remove the filling loop from the connections.

3.2 HOW TO RESET THE APPLIANCE

Reset function

In order to reset the boiler’s operation in the event of a fault, it is necessary to access the fault description screen. If the lockout is of a non-volatile type that requires a reset procedure, this will be indicated on the screen, and can be carried out by pressing the **“ok”** button on the REC10.

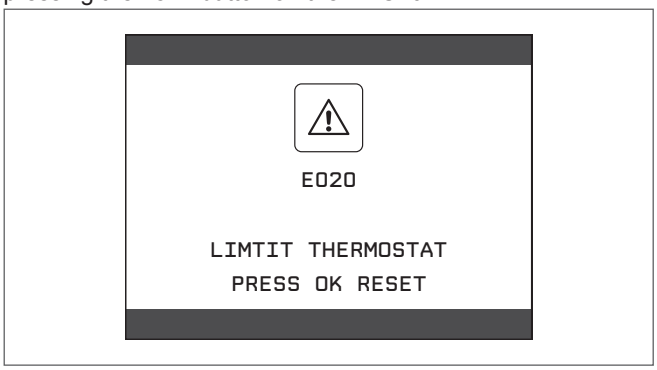

At this point, if the correct operating conditions have been restored, the boiler will restart automatically.
If the attempts to reset the fault do not restore the boiler’s functionality, please contact your local Customer Support Service.
Up to a maximum of 3 reset attempts can be made using the REC10, after which the machine must be disconnected from the power supply to reset the number of attempts available.

⚠ Request the intervention of the Technical Assistance Centre.

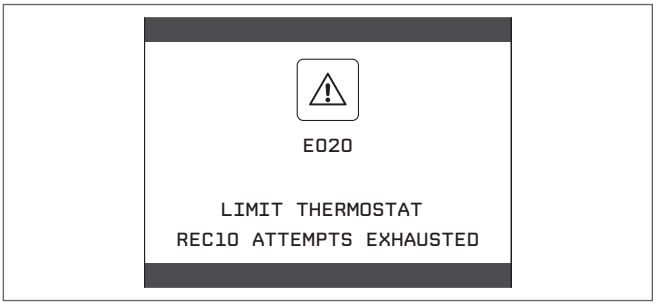

3.3 HOW TO SHUT DOWN THE SYSTEM FOR SHORT PERIODS

If necessary the boiler status can be switched to the OFF ⏻ position during short periods of absence.

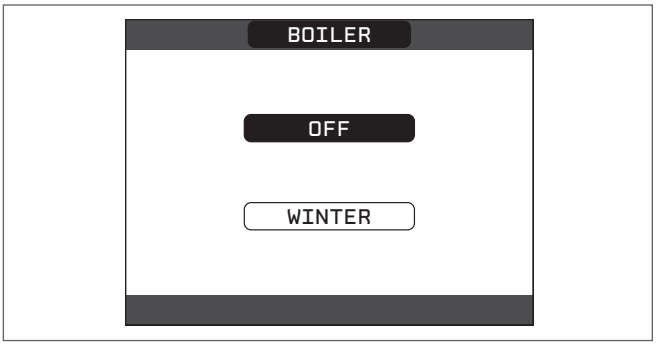

Provided that the electrical and gas supplies remain switched ON to the appliance, the following frost-protection functions will remain active in order to protect the appliance:

- **heating frost-protection:** this function is activated if the temperature measured by the flow sensor drops below 5°C. A heat request is generated in this phase with the ignition of the burner at minimum output, which is maintained until the outlet water temperature reaches 35° C;
- **DHW frost-protection:** the function starts if the temperature measured by the DHW sensor falls below 5°C. A heat request is generated in this phase with the ignition of the burner at minimum output, which is maintained until the outlet water temperature reaches 55° C.

⚠ The activation of the FROST-PROTECTION function is indicated by a scrolling message at the base of the REC10 display.

- **pump anti-blocking:** the circulating pump is energised for a 30-second period if it remains inactive for more than 24-hours.

3.4 HOW TO SHUT DOWN THE SYSTEM FOR LONG PERIODS

If the boiler will not be in used for a prolonged period of time, the following operations must be carried out:

- switch the boiler to OFF ⏻
- isolate the appliance from the gas and electricity supplies.

In this case, the frost-protection and anti-blocking systems are deactivated. Drain both the heating and domestic water systems to avoid any risk of freezing.

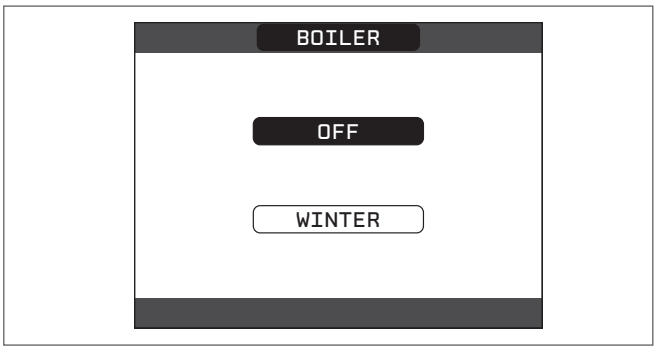

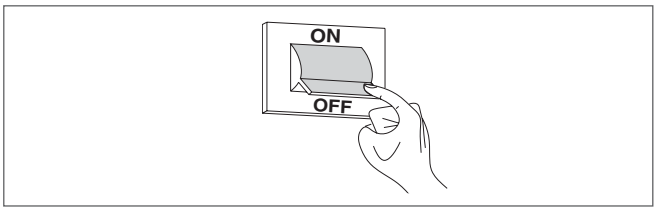

3.5 HOW TO CARE FOR THE APPLIANCE

To clean the outer casing use only a clean damp cloth. Do not use any scourers or abrasive cleaners.

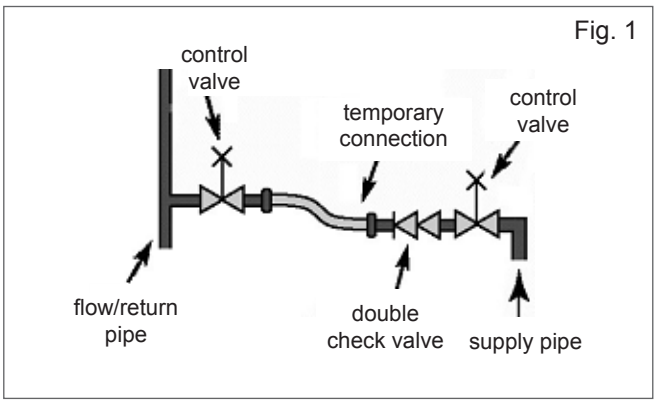

4. WHAT IF...

4.1 WHAT IF I SUSPECT A GAS LEAK

If you suspect a gas leak, turn off the gas supply at the gas meter and contact your installer or local gas supplier. If you require further advice please contact your nearest Vokèra office.

4.2 WHAT IF I HAVE FREQUENTLY TO TOP-UP THE SYSTEM

If the system regularly requires topping-up, it may be indicative of a leak. Please contact your installer and ask him to inspect the system.

4.3 WHAT IF THE APPLIANCE IS DUE ITS ANNUAL SERVICE

Advice for tenants only
Your landlord should arrange for servicing.
Advice for homeowners
Please contact Vokèra Customer Service **(0844 3910999 (UK) or 056 7755057 (ROI)** if you would prefer a Vokèra service engineer or agent to service your appliance. Alternatively your local GAS SAFE registered engineer may be able to service the appliance for you.

4.4 WHAT IF I NEED TO CALL AN ENGINEER

If you think your boiler may have developed a fault, please contact your installer or Vokèra Customer Services **(0844 3910999 (UK) or 056 7755057 (ROI)** have all your details to hand including full address and postcode, relevant contact numbers, and your appliance log book. It is a requirement of your warranty terms & conditions that your Benchmark logbook has been filled out correctly and is fully up to date.

INTRODUCTION

All installers are asked to follow the Benchmark Scheme by adhering to the Code of Practise, which can be obtained from www.centralheating.co.uk.

The **evolve** has a new ACC (Active Combustion Control) system. This new control system ensures functionality, efficiency and low emissions under any conditions.
The ACC system uses an ionisation sensor immersed in the burner flame, whose information allows the control board to operate the gas valve that regulates the fuel.
This sophisticated control system provides the auto-regulation of the combustion, so there is no need for an initial calibration. The ACC system is able to adapt the boiler to operate with different gas compositions, different outlet pipes lengths and different altitudes (within the specified design limits).
The ACC system can also perform an auto-diagnostic operation that locks out the burner before the permitted upper emission limit is exceeded.
The **evolve** product family comprises a range of high-efficiency combination and system boilers. These appliances – by design – incorporate electronic ignition, circulating pump, expansion vessel, safety valve, pressure gauge and automatic by-pass.
The range is produced as room sealed, category II2H3P appliances, suitable for internal wall mounting applications only.
Each appliance is provided with a fan powered flue outlet with an annular co-axial combustion air intake that can be rotated – horizontally – through 360 degrees for various horizontal or vertical applications.

These appliances are designed for use with a sealed system only; consequently they are not intended for use on open vented systems.

This booklet is an integral part of the appliance. It is therefore necessary to ensure that the booklet is handed to the person responsible for the property in which the appliance is located/ installed. A replacement copy can be obtained online from the Vokera website.
When the product reaches the end of its life it should dismantled and recycled in accordance with current requirements. Local authority waste collection facilities may offer such disposal services.

The boiler complies with basic requirements of the following Directives:

Gas directive 2009/142/EC;

Yield directive: Article 7(2) and Annex III of directive 92/42/EEC;

Electromagnetic compatibility directive 2014/30/EU;

Low-voltage directive 2014/35/EU;

Directive 2009/125/EC Ecodesign for energy-using appliances;

Directive 2010/30/EU Indication by labelling of the consumption of energy by energy-related products;

Delegated Regulation (EU) No. 811/2013;

Delegated Regulation (EU) No. 813/2013.

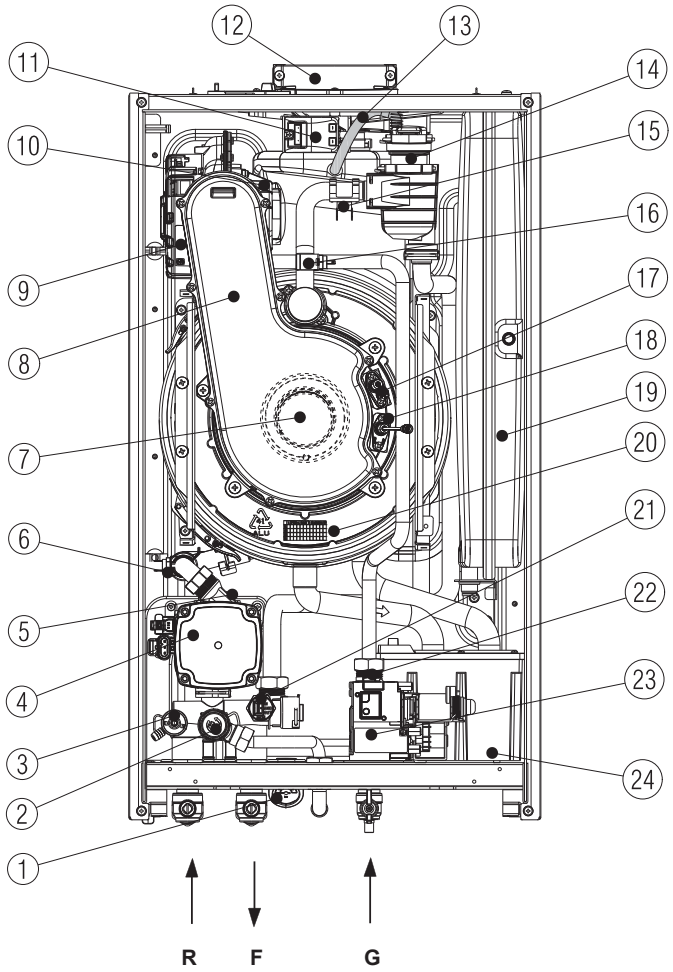

General layout

1 Analogue pressure gauge
2 Safety valve
3 Drain valve
4 Pump
5 Lower auto air vent
6 Return sensor
7 Burner
8 Inlet conveyor
9 Fan
10 Mixer
11 Ignition transformer
12 Top flue outlet
13 AAV hose
14 Upper auto air vent
15 Limit thermostat
16 Flow sensor
17 Ignition electrode
18 Detection electrode
19 Expansion vessel
20 Main heat exchanger
21 Pressure transducer
22 Injector
23 Gas valve
24 Siphon

R Heating return connection
F Heating flow connection
G Gas connection

Fig. 2

SECTION 1 - DESIGN PRINCIPLES AND OPERATING SEQUENCE

1.1 PRINCIPLE COMPONENTS

- A fully integrated electronic control board featuring electronic temperature control, anti-cycle control, pump over-run, self-diagnostic fault indicator, full air/gas modulation
- Aluminium heat exchanger
- Electronic ignition with flame supervision
- Integral high-head pump
- Fan
- Expansion vessel
- Flue sensor
- Pressure transducer
- Safety valve

1.2 MODE OF OPERATION (at rest)

When the appliance is at rest and there are no requests for heating or hot water, the following functions are active:

- frost-protection system: the frost-protection system protects the appliance against the risk of frost damage, if the main temperature falls to 5°C, the appliance will function on minimum power until the temperature on main reaches 35°C.
- anti-block function: the anti-block function enables the pump to be energised for short periods, when the appliance has been inactive for more than 24-hours.

1.3 MODE OF OPERATION (Heating)

When there is a request for heat via the REC/or any external control, the pump and fan are started, the fan speed will modulate until the correct signal voltage is received at the control PCB. At this point an ignition sequence is enabled.
Ignition is sensed by the electronic circuit to ensure flame stability at the burner. Once successful ignition has been achieved, the electronic circuitry increases the gas rate to 75% for a period of 15 minutes. Thereafter, the boiler's output will either be increase to maximum or modulate to suit the set requirement. When the appliance reaches the desired temperature the burner will shut down and the boiler will perform a three-minute anti-cycle (timer delay).
When the request for heat has been satisfied the appliance pump and fan may continue to operate to dissipate any residual heat within the appliance.

1.4 SAFETY DEVICES

When the appliance is in use, safe operation is ensured by:

- a pressure transducer that monitors system water pressure and will de-activate the pump, fan, and burner should the system water pressure drop below the required minimum value;
- fan speed sensor to ensure safe operation of the burner;
- a high limit thermostat that over-rides the temperature control circuit to prevent or interrupt the operation of the burner;
- flame sensor that will shut down the burner when no flame signal is detected and/or when incomplete combustion or high emissions are detected;
- flue sensor that will shut down the burner if the flue threshold temperature is exceeded;
- a safety valve which releases excess pressure from the primary circuit.

NOTE
When the appliance is first switched ON or when the electrical supply is interrupted then restored, the appliance will enter a short 'purge' cycle whereby the pump cycles ON & OFF for approximately 2-minutes. Only when the 'purge' cycle has been completed, will the appliance go through an ignition sequence.

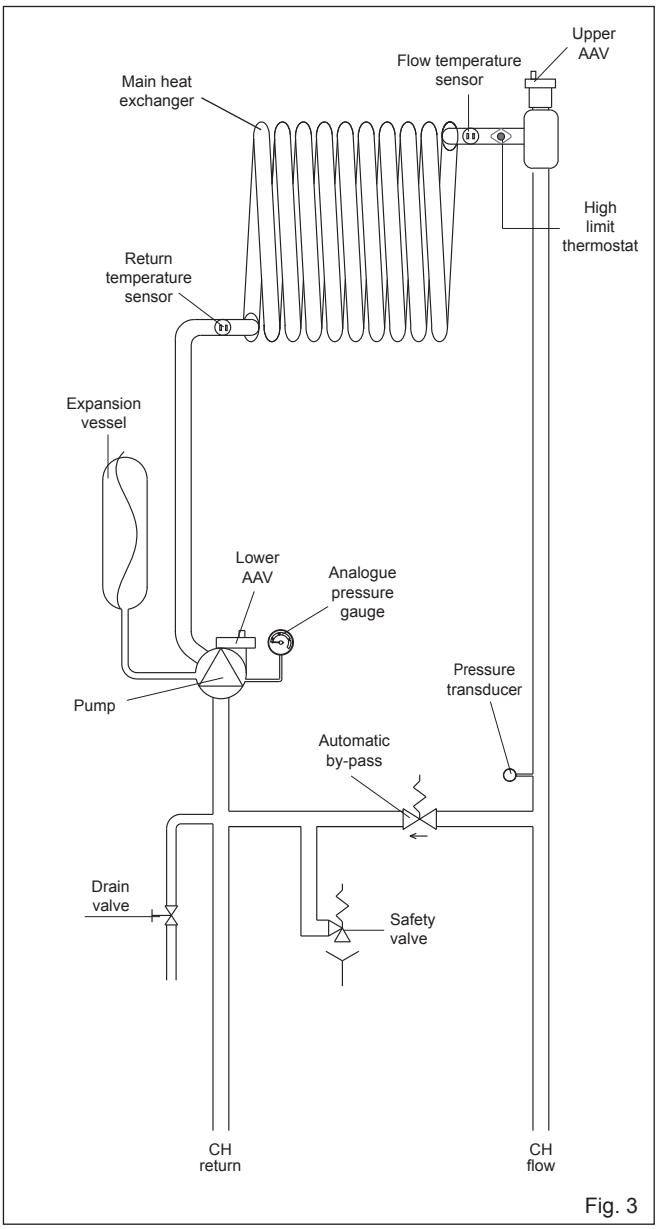

Fig. 3

SECTION 2 - TECHNICAL DATA

2.1 Central Heating	evolve 18S	evolve 24S	evolve 30S	evolve 35S
Heat input (kW)	18.00	24.00	32.00	35.00
Maximum heat output (kW) 60/80°C	17.60	23.54	31.39	34.30
Minimum heat output (kW) 60/80°C	3.61	4.19	4.99	5.87
Maximum heat output (kW) 30/50°C	19.17	25.56	34.08	37.21
Minimum heat output (kW) 30/50°C	3.99	4.58	5.28	6.32
Heat input RANGE RATED (Qn) (kW)	18.00	24.00	32.00	35.00
Minimum heat input RANGE RATED (Qm) (kW)	6.70	4.30	5.10	6.00
Minimum working pressure	0.25-0.45 bar			
Maximum working pressure	3.0 bar			
Minimum flow rate	350 l/h			
2.2 Gas Pressures				
Inlet pressure (G20)	20.0 mbar	20.0 mbar	20.0 mbar	20.0 mbar
Heating maximum gas rate (m^3/hr)	1.90	2.54	3.38	3.70
Minimum gas rate (m^3/hr)	0.39	0.45	0.54	0.63
Injector size (mm)	1 x 4.3	1 x 4.3	1 x 6.0	1 x 6.0
2.3 Expansion Vessel				
Capacity	8 litres		9 litres	
Maximum system volume	74 litres			
Pre-charge pressure	1 bar			
2.4 Dimensions				
Height (mm)	740			
Width (mm)	420			
Depth (mm)	275		350	
Dry weight (kg)	34		37	
2.5 Clearances				
Sides	2mm*			
Top	100mm** from casing or 25mm above flue elbow (whichever is applicable)**			
Bottom	100mm^			
Front	450mm^^			
	* It may be necessary to remove adjacent components if component removal/replacement is required ** Consideration should be given to providing reasonable clearance for the insertion of a FGA probe. ^ This can be reduced to 4mm if a removal panel enables the required 100mm ^^ When installed in a cupboard, this dimension can be reduced to 4mm provided that the required 450mm is available when the door is opened/removed.			
2.6 Connections				
Flow & return	22mm			
Gas	15mm			
Safety valve	15mm			
Condense	21mm			
2.7 Electrical				
Power consumption CH (Watts)	54	65	93	110
Voltage (V/Hz)	230/50			
Internal fuse	4 A T (for PCB) - 3.15A F (for connections block)			
External fuse	3A			
2.8 Flue Details (concentric 60-100)				
Maximum horizontal flue length (60/100mm)	10.0 m	10.0 m	6.0 m	5.0 m
Maximum vertical flue length (60/100mm)	11.0 m	11.0 m	7.0 m	6.0 m
2.9 Efficiency				
SEDBUK (%)	90.26	90.40	90.30	90.25
2.10 Emissions				
CO_2 @ maximum output (%) (*)	9.2	9.0	9.0	9.0
CO_2 @ minimum output (%) (*)	9.1	8.9	8.8	9.1
CO @ maximum output (ppm)	140	150	160	220
CO @ minimum output (ppm)	10	10	20	15
NOx rating	class 6	class 6	class 6	class 6
2.11 Fan rotations				
Number of fan rotations with slow ignition (rpm)	5,500	5,500	5,000	5,000
Maximum number of heating fan rotations (rpm)	5,600	6,500	7,500	7,000
Minimum number of heating fan rotations (rpm)	1,500	1,500	1,500	1,600

(*) CO_2 tolerance = +0.6% -1%

Parameter	Symbol	evolve 18S	evolve 24S	evolve 30S	evolve 35S	Unit
Seasonal space heating energy efficiency class	-	A	A	A	A	-
Water heating energy efficiency class	-	-	-	-	-	-
Rated heat output	Pnominal	18	24	31	34	kW
Seasonal space heating energy efficiency	ηs	94	94	94	94	%
Useful heat output						
At rated heat output and high-temperature regime (*)	P4	17.6	23.5	31.4	34.3	kW
At 30% of rated heat output and low-temperature regime (**)	P1	5.9	7.9	10.5	11.5	kW
Useful efficiency						
At rated heat output and high-temperature regime (*)	η4	88.2	88.3	88.2	88.2	%
At 30% of rated heat output and low-temperature regime (**)	η1	98.9	98.9	98.6	98.5	%
Auxiliary electricity consumption						
At full load	elmax	28.0	37.0	31.4	34.3	W
At part load	elmin	14.0	14.0	10.5	11.5	W
In Stand-by mode	PSB	3.0	3.0	3.0	3.0	W
Other parameters						
Stand-by heat loss	Pstby	42.0	42.0	46.0	42.0	W
Pilot flame energy consumption	Pign	-	-	-	-	W
Annual energy consumption	QHE	37	42	56	62	GJ
Sound power level, indoors	LWA	51	53	52	51	dB
Emissions of nitrogen oxides	NOx	46	33	48	44	mg/kWh
For combination heaters						
Declared load profile		-	-	-	-	
Water heating energy efficiency	ηwh	-	-	-	-	%
Daily electricity consumption	Qelec	-	-	-	-	kWh
Daily fuel consumption	Qfuel	-	-	-	-	kWh
Annual electricity consumption	AEC	-	-	-	-	kWh
Annual fuel consumption	AFC	-	-	-	-	GJ

(*) High-temperature regime means 60 °C return temperature at heater inlet and 80 °C feed temperature at heater outlet.
(**) Low temperature means for condensing boilers 30 °C, for low-temperature boilers 37 °C and for other heaters 50 °C return temperature (at heater inlet).

NOTE (if the outdoor temperature sensor or the control panel, or even both devices, are present in the boiler)
With reference to the Delegated Regulation (EU) No. 811/2013, the information in the table can be used for completing the product data sheet and the labelling for room heating appliances, for mixed heating appliances, for all those appliances for enclosed space heating, for temperature control devices and solar devices:

NOTE	NOTE	NOTE
OUTDOOR TEMPERATURE SENSOR	II	2%
CONTROL PANEL*	V	3%
OUTDOOR TEMPERATURE SENSOR + CONTROL PANEL*	VI	4%

(*) Set as ambient regulator

2.12 PUMP DUTY

Fig. 4 shows the flow-rate available – after allowing for pressure loss through the appliance – for system requirements. When using this graph, apply only the pressure loss of the system.

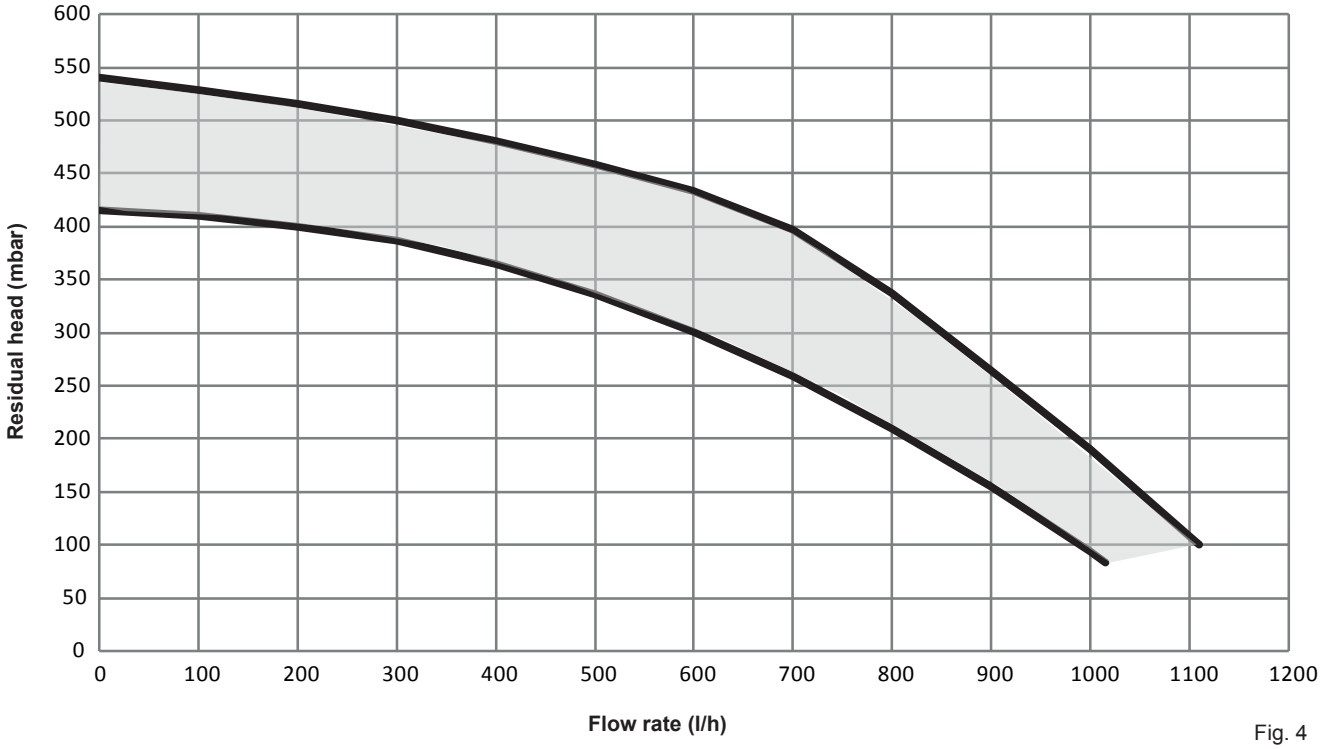

Fig. 4

Fig. 5

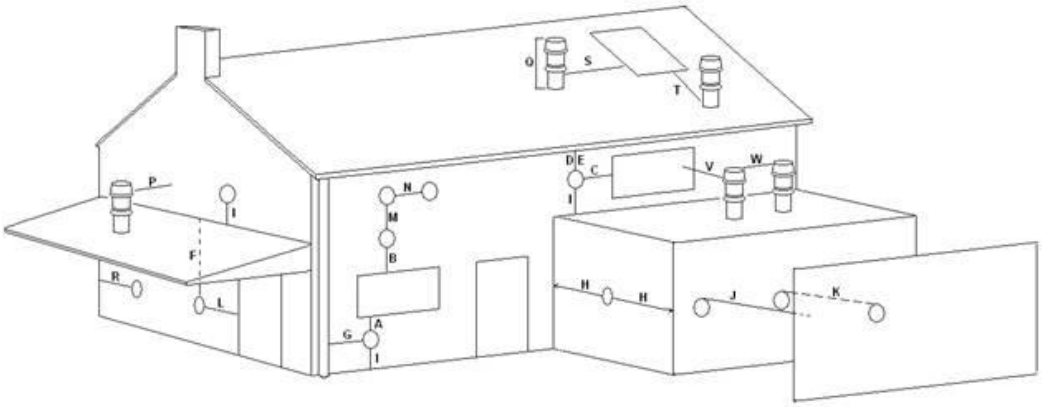

Key	Location	Minimum distance
A	Below an opening (window, air-brick, etc.)	300 mm
B	Above an opening (window, air-brick, etc.)	300 mm
C	To the side of an opening (window, air-brick, etc.)	300 mm
D	Below gutter, drain-pipe, etc.	25 mm
E	Below eaves	25 mm
F	Below balcony, car-port roof, etc.	25 mm
G	To the side of a soil/drain-pipe, etc.	25 mm (60mm for 80/125mm)
H	From internal/external corner	25 mm (60mm for 80/125mm)
I	Above ground, roof, or balcony level	300 mm
J	From a surface or boundary facing the terminal	600 mm*
K	From a terminal facing a terminal	1200 mm
L	From an opening in the car-port into the building	1200 mm
M	Vertically from a terminal on the same wall	1500 mm
N	Horizontally from a terminal on the same wall	300 mm
P	From a structure to the side of the vertical terminal	300 mm
Q	From the top of the vertical terminal to the roof flashing	As determined by the fixed collar of the vertical terminal
R	To the side of a boundary	300 mm
S	To the side of an opening or window on a pitched roof	600 mm
T	Below an opening or window on a pitched roof	2000 mm
V	From a vertical terminal to an adjacent opening (window, air-brick, etc.)	(call Vokera technical for advice)
W	From a vertical terminal to an adjacent vertical terminal	300 mm (only if both terminals are the same height)

*The possibility that this may be deemed as causing a nuisance, should be considered

SECTION 3 - CONTROL PANEL (REC10)

The REC10 is a fully functional UI (User Interface) that acts as a visual reference for the appliance and system status; and can also be used to view, input and adjust relevant system parameters and functions. The centre of the UI will normally display the current operating temperature (according to the mode of operation); however when the screensaver is active, the current time will be displayed.

The value expressed in bar refers to the system's water pressure.

The top of the screen shows the information regarding the current date and time, as well as the outdoor temperature, if available.

On the left and right sides are displayed the icons indicating the status of the system; their meaning is as follows.

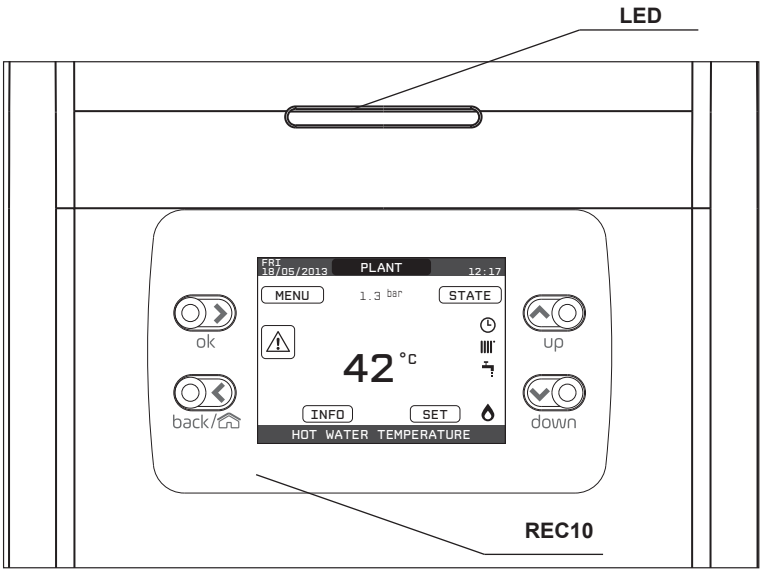

LED		Light signal indicating the operating status of the boiler. Can be red or green (see specific paragraph)
REC10		Boiler control panel
Key area	ok	ok= confirm
	back/	back= return to the previous screen cancel selection return to the main screen (press > 2 sec.)
	up	up= allows you to choose between the options PLANT-STATE-SET-INFO-MENU and to surf through the submenus scrolling upwards
	down	down= allows you to choose between the options PLANT-STATE-SET-INFO-MENU and to surfe through the submenus scrolling down

	This icon indicates that the OFF operating status mode has been set. Any ignition request is ignored except for the frost-protection function. The pump anti-lock and frost protection functions remain active.
	This icon indicates that WINTER mode has been selected (HEATING function enabled). If a heating request from the main zone is in progress, the icon will be flashing.
	This icon indicates that the circuit for domestic hot water production is enabled. When a domestic hot water request is in progress, the icon flashes (default value - parameter: "water tank type = 0").
	When the "embedded clock " is enabled this icon indicates that the system heating (main zone) is in AUTOMATIC mode (the management of the heating requests follows the ON/OFF times that have been programmed). If the heating function is not enabled during the current time frame, the icon will be crossed out.
	When the "central heating programming timing" is enabled this icon indicates that the system heating (main zone) is in MANUAL mode (the management of the heating requests does not follow what has been set with the programming timing, but it is always active).
OFF	This icon indicates that the system (main zone) has been set to off (not active).
	This icon indicates that the system is detecting the presence of a flame.
	This icon indicates the presence of an anomaly, and is always flashing.

Pressing the keys **"up"** and **"down"** it is possible to choose from among the following options:

- **PLANT:** the display will indicate the temperature of the flow sensor of the boiler
- **STATE/BOILER:** enables access to choose the operating mode of the appliance: OFF, Winter
- **STATE/MAIN ZONE** (if embedded clock disabled)**:** enables access to choose the operating mode (On or OFF) of the main heating zone
- **STATE/MAIN ZONE** (if embedded clock is enabled)**:** enables access to choose operating mode of the embedded clock (AUTO, MANUAL, OFF)
- **SET:** to view or adjust the heating setpoint value
- **INFO:** to view the current values or status of the various appliance inputs/sensors
- **MENU:** to access the system's configuration menus.

The configuration MENU is organised with a multi-access level tree structure. With the **"ok"** key you can access the selected submenu, with the **"up"** and **"down"** keys it is possible to navigate through the submenus, while the **"back"** key takes you back to the previous level.

An access level has been fixed for each submenu: USER level, always available; TECHNICAL level, password protected.
Below is a summary of the MENU tree structure of the REC10.

⚠ Some of the information might not be available on the REC10 depending on the access level, the status of the machine or the system configuration.

MENU	DEFAULT VALUE FACTORY SET	MINIMUM VALUE	MAXIMUM VALUE	ACCESS LEVEL NOTES	SET VALUE
SETTINGS				USER	
TIME & DATE				USER	
LANGUAGE		ITALIANO / ENGLISH		USER	
BACKLIGHT	5 min	1 min	15 min	USER	
TIME SCHEDULE				USER	
MAIN				USER Only if POR = 1	
ZONE1				USER Only if POR = 1	
ZONE2				USER Only if POR = 1	
DHW				USER	
DHW HEAT PUMP				USER	
TECHNICAL				INSTALLER	
INSTALLATION				INSTALLER	
ZONES MANAGER				INSTALLER	
MODIFY ZONE	MAIN	MAIN / ZONE1 / ZONE2		INSTALLER	
ACTUATION TYPE	ITRF05/AKM	ITRF05/AKM	BE16	INSTALLER Only MAIN zone	
REQUEST TYPE	THERMOSTAT	THERMOSTAT / TEMPERATURE PROBE / REC10 MASTER / REC10 SLAVE		INSTALLER	
BE16 ADDRESS	- -	1	6	INSTALLER Only zones with ACTUATION = BE16	
HYDRAULIC CONF	DIRECT ZONE	DIRECT ZONE	MIXING ZONE	INSTALLER Only zones with ACTUATION = BE16	
ZONE TYPE	HIGH TEMP.	HIGH TEMP.	LOW TEMP.	INSTALLER	
MIN CH SET	40°C (AT) 20°C (BT)	20°C	MAX CH SET	INSTALLER	
MAX CH SET	80,5°C (AT) 45°C (BT)	MIN CH SET	80,5°C (AT) 45°C (BT)	INSTALLER	
CHANGE NAME				INSTALLER	
PI - PROPORTIONAL	5	0	99	SERVICE Only mixing zones with ACTUATION=BE16	
PI - INTEGRAL	10	0	99	SERVICE Only mixing zones with ACTUATION=BE16	
VALVE RUN	120 sec	0 sec	240 sec	SERVICE Only mixing zones with ACTUATION=BE16	
CLOSING AT POWER ON	140 sec	0 sec	240 sec	SERVICE Only mixing zones with ACTUATION=BE16	
OUTLET OVER	55°C	0°C	100°C	SERVICE Only BT zones with ACTUATION =BE16	
OUTLET OVER TEST TIME	0min	0min	240min	SERVICE Only BT zones with ACTUATION =BE16	
OUTLET OVER WAIT TIME	2min	VALVE RUN	240min	SERVICE Only BT zones with ACTUATION =BE16	
OUTLET OVER REST TIME	2min	0min	240min	SERVICE Only BT zones with ACTUATION =BE16	
FREEZE PROT TEMP	6°C	-20°C	50°C	SERVICE Only zones with ACTUATION = BE16	
FREEZE PROT OFFSET ZONE	5°C	1°C	20°C	SERVICE Only zones with ACTUATION = BE16	
FREEZE PROT T EXT	10°C	0°C	100°C	SERVICE Only zones with ACTUATION = BE16	
POR	0 (1 if REC10 in the AMBIENT)	0	1	INSTALLER	
ADD ZONE				INSTALLER	
DELETE ZONE				INSTALLER	
SENSOR CALIBRATION	0,0°C	- 6,0°C	6,0°C	INSTALLER	
SYSTEM RESET				INSTALLER	

	DEFAULT VALUE FACTORY SET	MINIMUM VALUE	MAXIMUM VALUE	ACCESS LEVEL NOTES	SET VALUE
PARAMETERS				INSTALLER	
TIMER OFF CH	3 min	0 min	20 min	INSTALLER	
HYST ON HIGH TEMP	5°C	2°C	10°C	SERVICE	
HYST OFF HIGH TEMP	5°C	2°C	10°C	SERVICE	
HYST ON LOW TEMP	3°C	2°C	10°C	SERVICE	
HYST OFF LOW TEMP	3°C	2°C	10°C	SERVICE	
SP INCR HIGH TEMP	5°C	0°C	10°C	SERVICE	
SP INCR LOW TEMP	0°C	0°C	6°C	SERVICE	
INCR COOLING SP	0°C	0°C	10°C	SERVICE	
PUMP DUTY CYCLE	85	41	100	SERVICE	
RESET TIMERS CH	FUNC. NOT ACTIVE	FUNC. NOT ACTIVE	FUNCTION ACTIVE	INSTALLER	
DHW THERMOSTAT	RELATED	RELATED	ABSOLUTE	INSTALLER Only in instantaneous configuration	
SLIDING OUTLET	DEACTIVATE FUNC.	DEACTIVATE FUNC.	ACTIVATE FUNCTION	INSTALLER	
CH DELAY POST-DHW	0	0	1	SERVICE	
CH DELAY TIME	6sec	1sec	255sec	SERVICE If CH DELAY POST-DHW = 1	
PRESS TRANSDUCER	1	0	1	SERVICE	
LOAD ENABLE	0	0	1	SERVICE Only if PRESS TRANSDUCER = 1	
START LOADING VALUE	0,6	0,4	1	SERVICE Only if LOAD ENABLE = 1	
PREHEATING	0	0	1	INSTALLER Only if managed by the control board	
THERMOREGULATION				INSTALLER	
CLIMATIC CURVES	MAIN	MAIN / ZONE1 / ZONE2		INSTALLER	
FIXED SET POINT	80,5 °C (AT) 45 °C (BT)	MIN CH SET	MAX CH SET	INSTALLER If EXTERNAL PROBE NOT connected	
NIGHT COMP	FUNC. NOT ACTIVE	FUNC. NOT ACTIVE	FUNCTION ACTIVE	INSTALLER If EXTERNAL PROBE connected	
CURVE SLOPE	2,0	1,0	3,0	INSTALLER If EXTERNAL PROBE connected, request type TA and zone type AT	
	0,4	0,2	0,8	INSTALLER If EXTERNAL PROBE connected, request type TA and zone type BT	
	2,0	0,1	5,0	INSTALLER If request type AMBIENT PROBE or REC10	
AMBIENT INFLUENCE	10	0	20	INSTALLER If request type AMBIENT PROBE or REC10	
OFFSET	20°C	20°C	40°C	INSTALLER If request type AMBIENT PROBE or REC10	
COOLING	18°C	4°C	20°C	INSTALLER	
BUILDING TYPE	5min	5min	20min	INSTALLER Only if EXTERNAL PROBE connected	
OUTDOOR REACTIVITY	20	0	255	INSTALLER Only if EXTERNAL PROBE connected	
RANGE RATED	MAX CH	MIN	MAX CH	INSTALLER	
CALIBRATION				INSTALLER	
MIN	see MULTIGAS TABLE	1200 RPM	3600 RPM	INSTALLER	
MAX	see MULTIGAS TABLE	3700 RPM	6300 RPM	INSTALLER	
MAX CH	see MULTIGAS TABLE	MIN	MAX	INSTALLER	

	DEFAULT VALUE FACTORY SET	MINIMUM VALUE	MAXIMUM VALUE	ACCESS LEVEL NOTES	SET VALUE
SWEEPER				INSTALLER	
ACTIVATE FUNCTION				INSTALLER	
DEACTIVATE FUNCTION				INSTALLER	
MAX SPEED	MAX			INSTALLER	
RANGE RATED SPEED	RANGE RATED			INSTALLER	
MIN SPEED	MIN			INSTALLER	
CHANGE FAN SPEED	Current speed	MIN	MAX	INSTALLER	
ANTI-LEGIONELLA	WEEKLY FUNCTION	F. NOT ACTIVE / DAILY FUNCTION / WEEKLY FUNCTION		INSTALLER	
VENT CYCLE	ENABLE FUN.	ENABLE FUN.	DISABLE FUN.	SERVICE	
DISABLE FUNCTION				SERVICE	
ENABLE FUNCTION				SERVICE	
STOP FUNCTION				INSTALLER Only if VENT CYLCE in progress	
EXHAUST PROBE RESET				INSTALLER	
ADD WATER TANK				INSTALLER Only in instantaneous configuration	
WATER TANK				INSTALLER	
REMOVE WATER TANK				INSTALLER	
WATER TANK TYPE	0	1	0	INSTALLER Only if only heating boiler	
WATER TANK SETPOINT	50°C	37,5°C	60°C	INSTALLER Only if HEAT PUMP enabled to DHW	
TANK FROST PROTECT	7°C	0°C	100°C	SERVICE Only if HEAT PUMP enabled to DHW	
TANK FR PROT OFFSET	5°C	1°C	20°C	SERVICE Only if HEAT PUMP enabled to DHW	
ADD SOLAR PLANT				INSTALLER Only if solar system is not configured	
SOLAR				INSTALLER	
REMOVE SOLAR PLANT				INSTALLER	
T MAX TANK	60°C	10°C	130°C	INSTALLER	
DELTA T ON PUMP	8°C	DELTA T OFF	30°C	INSTALLER	
DELTA T OFF PUMP	4°C	4°C	DELTA T ON	INSTALLER	
INTEGRATION DELAY	0 min	0 min	199 min	INSTALLER	
COLLECTOR T MIN	(- -)	(- -) / -30°C	0°C	INSTALLER	
COLLECTOR T MAX	110°C	COLL. T PROT	180°C	INSTALLER	
COLLECTOR T PROT	110°C	80°C.	T MAX COLL.	INSTALLER	
COLLECTOR T AUTH	40°C	T LOCK	95°C	INSTALLER	
COLLECTOR T LOCK	35°C	-20°C	COLL. T AUTH	INSTALLER	
PWM COLL PUMP	0 min	0 min	30 min	INSTALLER	
TANK COOLING	FUNC. NOT ACTIVE	FUNC. NOT ACTIVE	FUNCTION ACTIVE	INSTALLER	
SOLAR PUMP STATE	OFF	OFF / ON / AUTO		INSTALLER	

	DEFAULT VALUE FACTORY SET	MINIMUM VALUE	MAXIMUM VALUE	ACCESS LEVEL NOTES	SET VALUE
ADD HEAT PUMP				INSTALLER Only if heat pump not configured	
HEAT PUMP				INSTALLER	
REMOVE HEAT PUMP				INSTALLER Only if heat pump configured	
USE FREE CONTACTS / USE BUS	USE BUS	USE BUS	USE FREE CONTACTS	SERVICE	
ENABLE / DISABLE COOLING	DEACTIVATE FUNCTION	FUNCTION ACTIVE	DEACTIVATE FUNCTION	INSTALLER	
USE FOR DHW / DON'T USE FOR DHW	DHW FUNCTION NOT ACTIVE	DHW FUNCTION ACTIVE	DHW FUNCTION NOT ACTIVE	INSTALLER	
ANTI FREEZE DELTA SET	1°C	0°C	6°C	SERVICE	
ENABLE / DISABLE NIGHT REDUCT	DEACTIVATE FUNCTION	FUNCTION ACTIVE	DEACTIVATE FUNCTION	INSTALLER	
REDUCED FREQUENCY	100%	50%	100%	SERVICE	
MIN OUTDOOR TEMP	5°C	-5°C	20°C	INSTALLER	
MIN DHW OUT TEMP	5°C	-5°C	20°C	INSTALLER	
MIN EMERG OUT T	-10°C	-20°C	10°C	INSTALLER	
BOILER INTEGR DELAY	30min	1min	240min	SERVICE	
HP INTEGR DELAY	30min	1min	240min	SERVICE	
BOILER WAITING	2min	1min	60min	SERVICE	
HEAT PUMP WAITING	2min	1min	60min	SERVICE	
INTEGRATION OFFSET	5°C	0°C	10°C	SERVICE	
WINTER SUMMER DELAY	0h	0h	24h	SERVICE	
WARNING VALIDATION	60sec	1sec	300sec	SERVICE	
ENABLE CIRC STATE ON/ AUTO	AUTO	ON	AUTO	INSTALLER	
DHW HP SETPOINT	60°C	20°C	60°C	SERVICE	
DHW OFFSET	10°C	0°C	25°C	SERVICE	
ENABLE ALARM HISTORY				SERVICE	
ALARM HISTORY				INSTALLER	
SCREED HEATING	DEACTIVATE F.	DEACTIVATE F.	ACTIVATE F.	INSTALLER	
DEACTIVATE FUNCTION				INSTALLER	
ACTIVATE FUNCTION				INSTALLER	
FUNCTION SETTINGS				SERVICE	
TFMIN	20°C	15°C	30°C	SERVICE	
TFMAX	35°C	30°C	55°C	SERVICE	
				SERVICE	
COMBUSTION CHECK				SERVICE	
GAS TYPE	NG	NG/LPG		SERVICE	
BOILER TYPE	A	A/B/C		SERVICE	
COMBUSTION OFFSET	RESTORE	RESTORE	RESET	SERVICE	
SYSTEM INFO				SERVICE	

3.1 Access to the technical parameters

Through the REC10 it is possible to access, using the TECHNICAL menu, a series of parameters that can be programmed to allow you to personalise the operation of the boiler:

- select MENU on the initial page of the REC10 and press the key ok

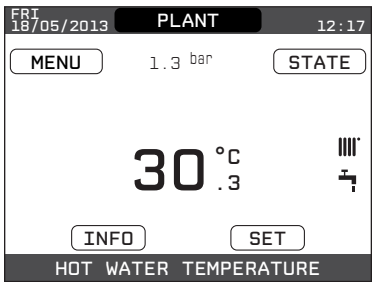

- keep the keys back/ and down pressed at the same time to enter the password menu (about 5 sec)

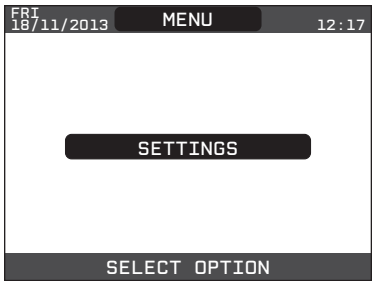

- using the keys up and down select the value of the password to access the INSTALLER or SERVICE authorisation level, depending on the level of the tree menu, then press the key ok

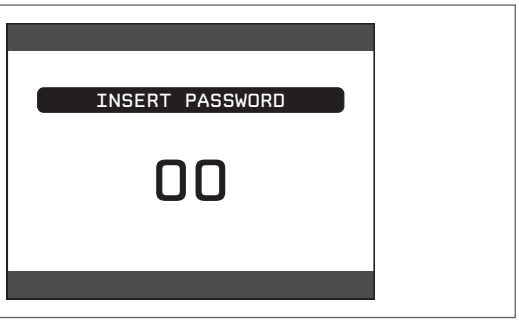

- select TECHNICAL with the keys up and down, confirming the selection with the key ok

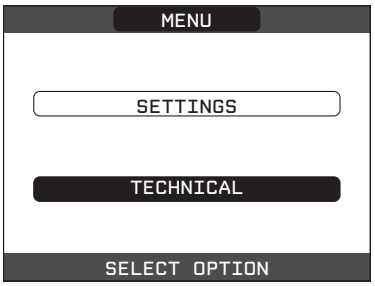

- access the desired menu and change/view the parameter concerned (see the menu tree on page 19).

It is possible to return to the start page at any time by keeping the key **"back"** pressed for at least 2 seconds.

SECTION 4 - GENERAL REQUIREMENTS (UK)

BS 5440	PART 1	FLUES
BS 5440	PART 2	FLUES & VENTILATION
BS 5449	PART 1	FORCED CIRCULATION HOT WATER SYSTEMS
BS 6798		INSTALLATION OF BOILERS OF RATED INPUT NOT EXCEEDING 70kW
BS 6891		LOW PRESSURE INSTALLATION PIPES

This appliance must be installed by a competent person in accordance with the Gas Safety (Installation & Use) Regulations.

4.1 RELATED DOCUMENTS

The installation of this boiler must be in accordance with the relevant requirements of the Gas Safety (Installation & Use) Regulations, the local building regulations, the current I.E.E. wiring regulations, the bylaws of the local water undertaking, the Building Standards (Scotland) Regulation, and Building Standards (Northern Ireland) Regulations.
It should be in accordance also with any relevant requirements of the local authority and the relevant recommendations of the following British Standard Codes of Practice.

4.2 LOCATION OF APPLIANCE

The appliance may be installed in any room or internal space, although particular attention is drawn to the requirements of the current I.E.E. wiring regulations, and in Scotland, the electrical provisions of the Building Regulations, with respect to the installation of the appliance in a room or internal space containing a bath or shower.
When an appliance is installed in a room or internal space containing a bath or shower, the appliance or any control pertaining to it must not be within reach of a person using the bath or shower (refer to IEE regs).
The location chosen for the appliance must permit the provision of a safe and satisfactory flue and termination. The location must also permit an adequate air supply for combustion purposes and an adequate space for servicing and air circulation around the appliance. Where the installation of the appliance will be in an unusual location special procedures may be necessary, BS 6798 gives detailed guidance on this aspect.
A compartment used to enclose the appliance must be designed and constructed specifically for this purpose. An existing compartment/cupboard may be utilised provided that it is modified to suit.
Details of essential features of compartment/cupboard design including airing cupboard installations are given in BS 6798.
This appliance is not configured for external installation applications.

4.3 GAS SUPPLY

The gas meter – as supplied by the gas supplier – must be checked to ensure that it is of adequate size to deal with the maximum rated input of all the appliances that it serves. Installation pipes must be fitted in accordance with BS 6891.
Pipe work from the meter to the appliance must be of adequate size. Pipes of a smaller size than the appliance gas inlet connection must not be used. The installation must be tested for soundness in accordance with BS6891.
If the gas supply serves more than one appliance, it must be ensured that an adequate supply is maintained to each appliance when they are in use at the same time.

NOTE
It is recognised that ‘pressure loss’ through the gas cock and gas valve may result in a pressure drop of approximately 2mbar between the gas meter and gas valve inlet test point; this will not impair the performance of the appliance, provided that a dynamic pressure of 18mbar is available at the appliance inlet.

4.4 FLUE SYSTEM

The terminal should be located where the dispersal of combustion products is not impeded and with due regard for the damage and discoloration that may occur to building products located nearby. The terminal must not be located in a place where it is likely to cause a nuisance (see fig. 5).
In cold and/or humid weather, water vapour will condense on leaving the terminal; the effect of such pluming must be considered.
If installed less than 2m above a pavement or platform to which people have access (including balconies or flat roofs) the terminal must be protected by a guard of durable material. The guard must be fitted centrally over the terminal. Refer to BS 5440 Part 1, when the terminal is 0.5 metres (or less) below plastic guttering or 1 metre (or less) below painted eaves.

4.5 AIR SUPPLY

The following notes are intended for general guidance only. This appliance is a room-sealed, fan-flued boiler, consequently it does not require a permanent air vent for combustion air supply. When installed in a cupboard or compartment, ventilation for cooling purposes is also not required.

4.6 WATER CIRCULATION

Detailed recommendations are given in BS 5449 Part 1 and BS 6798. The following notes are for general guidance only.

4.6.1 PIPEWORK

It is recommended that copper tubing to BS 2871 Part 1 is used in conjunction with soldered capillary joints. Where possible pipes should have a gradient to ensure air is carried naturally to air release points and that water flows naturally to drain cocks. Except where providing useful heat, pipes should be insulated to avoid heat loss and in particular to avoid the possibility of freezing. Particular attention should be paid to pipes passing through ventilated areas such as under floors, loft space, and void areas.

4.6.2 AUTOMATIC BY-PASS

The appliance has a built-in automatic by-pass, consequently there is no requirement for an external by-pass, however the design of the system should be such that it prevents boiler ‘cycling’.

4.6.3 DRAIN COCKS

These must be located in accessible positions to facilitate draining of the appliance and all water pipes connected to the appliance. The drain cocks must be manufactured in accordance with BS 2879.

4.6.4 AIR RELEASE POINTS

These must be positioned at the highest points in the system where air is likely to be trapped. They should be used to expel trapped air and allow complete filling of the system.

4.6.5 EXPANSION VESSEL

The appliance has an integral expansion vessel to accommodate the increased volume of water when the system is heated. Refer to the specification table for more detailed information.

4.6.6 FILLING POINT

A method for initial filling of the system and replacing water lost during servicing etc. directly from the mains supply, should be provided (see fig. 6). This method of filling complies with the current Water Supply (Water Fittings) Regulations 1999 and Water Bylaws 2000 (Scotland).

4.6.7 LOW PRESSURE SEALED SYSTEM

An alternative method of filling the system would be from an independent make-up vessel or tank mounted in a position at least 1 metre above the highest point in the system and at least 5 metres above the boiler (see fig. 7).
The cold feed from the make-up vessel or tank must be fitted with an approved non-return valve and stopcock for isolation purposes. The feed pipe should be connected to the return pipe as close to the boiler as possible.

4.6.8 FREQUENT FILLING

Frequent filling or venting of the system may be indicative of a leak. Care should be taken during the installation of the appliance to ensure all aspects of the system are capable of withstanding pressures up to at least 3 bar.

4.7 ELECTRICAL SUPPLY

The appliance is supplied for operation on 230V @ 50Hz electrical supply; it must be protected with a 3-amp fuse (supplied). The method of connection to the mains electricity supply must allow for complete isolation from the supply. The preferred method is by using a double-pole switch with a contact separation of at least 3mm. The switch must only supply the appliance and its corresponding controls, i.e. time clock, room thermostat, etc. Alternatively an un-switched shuttered socket with a fused 3-pin plug both complying with BS 1363 is acceptable.

Warning!

This appliance must be earthed.

4.8 MOUNTING ON A COMBUSTIBLE SURFACE

The appliance can be mounted on a wall of combustible material without any requirement to fit any additional protective (fire-resistant) material.

4.9 TIMBER FRAMED BUILDINGS

If the appliance is to be fitted in a timber framed building, it should be fitted in accordance with the Institute of Gas Engineers publication (IGE/UP/7) 'Guide for Gas Installations in Timber Frame Buildings'.

4.10 WATER TREATMENT

Vokera recommend that water treatment be carried out in accordance with the Benchmark Guidance on water treatment in central heating systems. If water treatment products are to be used, then they must be entirely suitable for use with an aluminium heat exchanger. Any water treatment product, must be administered in strict accordance with the manufacturer's instructions.

If the appliance is to be installed to an existing system; water treatment and flushing of the complete heating system should be carried out in accordance with BS 7593 and the Benchmark Guidance on water treatment in central heating systems.

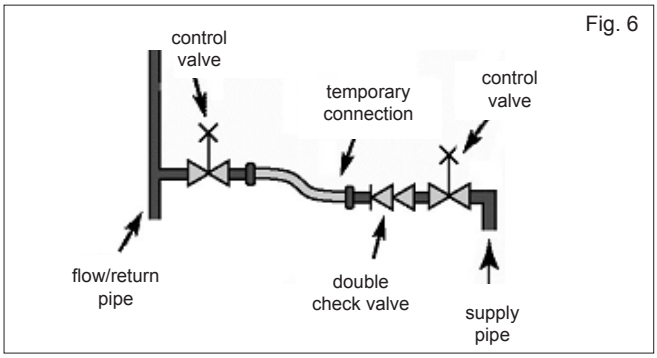

Fig. 6

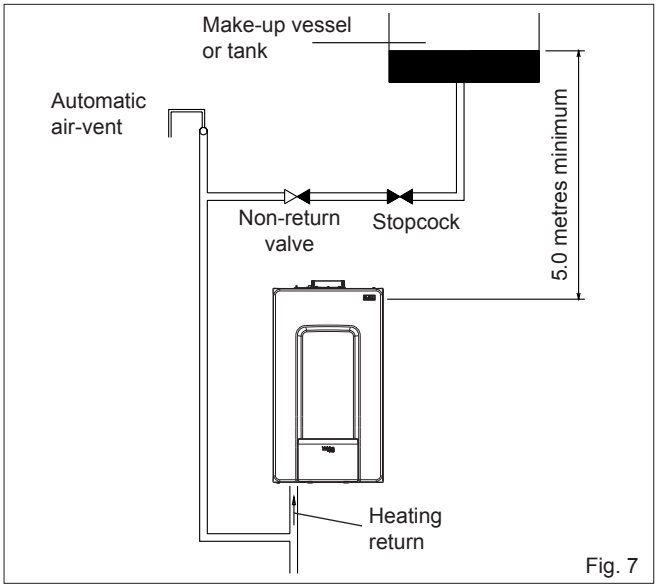

Fig. 7

SECTION 4A - GENERAL REQUIREMENTS (EIRE)

This appliance must be installed by a competent person in accordance with and defined by, the Standard Specification (Domestic Gas Installations) Declaration (I.S. 813).

4A.1 RELATED DOCUMENTS

The installation of this boiler must be in accordance with the relevant requirements of the local building regulations, the current ETCI National Rules for Electrical Installations, and the bylaws of the local water undertaking.

It should be in accordance also with any relevant requirements of the local and/or district authority.

4A.2 LOCATION OF APPLIANCE

The appliance may be installed in any room or internal space, although particular attention is drawn to the requirements of the current ETCI National Rules for Electrical Installations, and I.S. 813, Annex K.

When an appliance is installed in a room or internal space containing a bath or shower, the appliance or any control pertaining to it must not be within reach of a person using the bath or shower.

The location chosen for the appliance must permit the provision of a safe and satisfactory flue and termination. The location must also permit an adequate air supply for combustion purposes and an adequate space for servicing and air circulation around the appliance. Where the installation of the appliance will be in an unusual location special procedures may be necessary, refer to I.S. 813 for detailed guidance on this aspect.

A compartment used to enclose the appliance must be designed and constructed specifically for this purpose. An existing compartment/cupboard may be utilised provided that it is modified to suit.

This appliance is not configured for external installation.

4A.3 GAS SUPPLY

The gas meter – as supplied by the gas supplier – must be checked to ensure that it is of adequate size to deal with the maximum rated input of all the appliances that it serves. Installation pipes must be fitted in accordance with I.S. 813.

Pipe work from the meter to the appliance must be of adequate size. Pipes of a smaller size than the appliance gas inlet connection must not be used. The installation must be tested for soundness in accordance with I.S. 813.

If the gas supply serves more than one appliance, it must be ensured that an adequate supply is maintained to each appliance when they are in use at the same time.

NOTE

It is recognised that 'pressure loss' through the gas cock and gas valve may result in a pressure drop of approximately 2mbar between the gas meter and gas valve inlet test point; this will not impair the performance of the appliance, provided that a dynamic pressure of 18mbar is available at the appliance inlet.

4A.4 FLUE SYSTEM

The terminal should be located where the dispersal of combustion products is not impeded and with due regard for the damage and discoloration that may occur to building products located nearby. The terminal must not be located in a place where it is likely to cause a nuisance (see I.S. 813).
In cold and/or humid weather, water vapour will condense on leaving the terminal; the effect of such pluming must be considered.
If installed less than 2m above a pavement or platform to which people have access (including balconies or flat roofs) the terminal must be protected by a guard of durable material. The guard must be fitted centrally over the terminal. Refer to I.S. 813, when the terminal is 0.5 metres (or less) below plastic guttering or 1 metre (or less) below painted eaves.

4A.5 AIR SUPPLY

The following notes are intended for general guidance only.
This appliance is a room-sealed, fan-flued boiler, consequently it does not require a permanent air vent for combustion air supply. When installed in a cupboard or compartment, ventilation for cooling purposes is also not required.

4A.6 WATER CIRCULATION

Specific recommendations are given in I.S. 813. The following notes are for general guidance only.

4A.6.1 PIPEWORK

It is recommended that copper tubing be used in conjunction with soldered capillary joints..
Where possible pipes should have a gradient to ensure air is carried naturally to air release points and that water flows naturally to drain cocks.
Except where providing useful heat, pipes should be insulated to avoid heat loss and in particular to avoid the possibility of freezing. Particular attention should be paid to pipes passing through ventilated areas such as under floors, loft space, and void areas.

4A.6.2 AUTOMATIC BY-PASS

The appliance has a built-in automatic by-pass, consequently there is no requirement for an external by-pass, however the design of the system should be such that it prevents boiler 'cycling'.

4A.6.3 DRAIN COCKS

These must be located in accessible positions to facilitate draining of the appliance and all water pipes connected to the appliance.

4A.6.4 AIR RELEASE POINTS

These must be positioned at the highest points in the system where air is likely to be trapped. They should be used to expel trapped air and allow complete filling of the system.

4A.6.5 EXPANSION VESSEL

The appliance has an integral expansion vessel to accommodate the increased volume of water when the system is heated. Refer to the specification table for more detailed information.

4A.6.6 FILLING POINT

A method for initial filling of the system and replacing water lost during servicing etc. should be provided (see fig. 6). You should ensure this method of filling complies with the local water authority regulations.

4A.6.7 LOW PRESSURE SEALED SYSTEM

An alternative method of filling the system would be from an independent make-up vessel or tank mounted in a position at least 1 metre above the highest point in the system and at least 5 metres above the boiler (see fig. 7). The cold feed from the make-up vessel or tank must be fitted with an approved non-return valve and stopcock for isolation purposes. The feed pipe should be connected to the return pipe as close to the boiler as possible.

4A.6.8 FREQUENT FILLING

Frequent filling or venting of the system may be indicative of a leak. Care should be taken during the installation of the appliance to ensure all aspects of the system are capable of withstanding pressures up to at least 3 bar.

4A.7 ELECTRICAL SUPPLY

The appliance is supplied for operation on 230V @ 50Hz electrical supply; it must be protected with a 3-amp fuse (supplied). The method of connection to the mains electricity supply must allow for complete isolation from the supply. The preferred method is by using a double-pole switch with a contact separation of at least 3mm. The switch must only supply the appliance and its corresponding controls, i.e. time clock, room thermostat, etc. Alternatively an un-switched shuttered socket with a fused 3-pin plug both complying with BS 1363 is acceptable.
Warning!
This appliance must be earthed.

4A.8 MOUNTING ON A COMBUSTIBLE SURFACE

The appliance can be mounted on a wall of combustible material without any requirement to fit any additional protective (fire-resistant) material.

4A.9 TIMBER FRAMED BUILDINGS

If the appliance is to be fitted in a timber framed building, it should be fitted in accordance with I.S. 813 and local Building Regulations.
The Institute of Gas Engineers publication (IGE/UP/7) 'Guide for Gas Installations in Timber Frame Buildings' gives specific advice on this type of installation.

4A.10 WATER TREATMENT

Vokera recommend that water treatment be carried out in accordance with the Benchmark Guidance on water treatment in central heating systems. If water treatment products are to be used, then they must be entirely suitable for use with an aluminium heat exchanger. Any water treatment product, must be administered in strict accordance with the manufacturer's instructions.
If the appliance is to be installed to an existing system; water treatment and flushing of the complete heating system should be carried out in accordance with BS 7593 and the Benchmark Guidance on water treatment in central heating systems.

4A.11 DECLARATION OF CONFORMITY

A Declaration of Conformity (as defined in I.S. 813) must be provided on completion of the installation.
A copy of the declaration must be given to the responsible person and also to the gas supplier if required.

5.1 DELIVERY

Due to the weight of the appliance it may be necessary for two people to lift and attach the appliance to its wall bracket. The appliance is contained within a heavy-duty cardboard carton. Lay the carton on the floor with the writing the correct way up.

5.2 CONTENTS

Contained within the carton is:

- the boiler
- the wall bracket
- carton template
- an accessories pack containing appliance service connections and washers
- the instruction pack containing the installation, servicing & user instructions, guarantee registration card and a 3-amp fuse.

5.3 UNPACKING

At the top of the carton pull both sides open – do not use a knife – unfold the rest of the carton from around the appliance, carefully remove all protective packaging from the appliance and lay the accessories etc. to one side. Protective gloves should be used to lift the appliance, the appliance back-frame should be used for lifting points.

5.4 PREPARATION FOR MOUNTING THE APPLIANCE

The appliance should be mounted on a smooth, vertical, surface, which must be capable of supporting the full weight of the appliance. Care should be exercised when determining the position of the appliance with respect to hidden obstructions such as pipes, cables, etc.

When the position of the appliance has been decided – using the template supplied – carefully mark the position of the wall mounting bracket and flue-hole (if applicable).

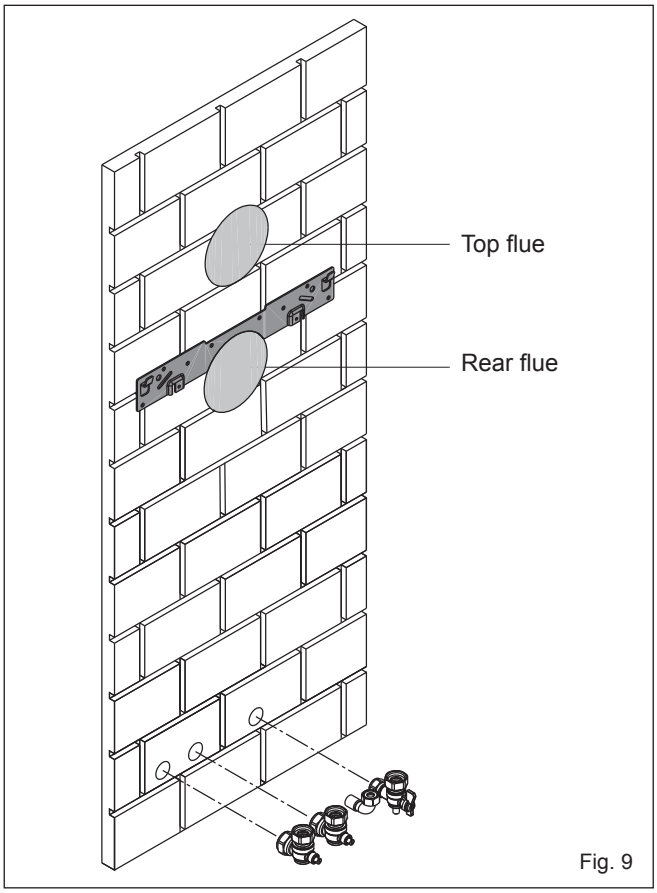

Fig. 9

5.5 FITTING THE FLUE

This appliance incorporates a 'click-fit' flue connection at the top of the appliance, and also incorporates a rear-flue connection. Should the rear-flue connection be preferred, the flue outlet will require to be re-configured from a top outlet to a rear outlet. Please refer to section 5.5.1.2 and the instructions supplied with the rear-flue kit (code 29450133) on how to re-configure the flue outlet and how to install the rear-flue terminal.

5.5.1 CONCENTRIC HORIZONTAL FLUE

These instructions relate specifically to the installation of this appliance with the Vokera 60/100mm 'X-type' (click-fit) flue terminals and accessories. For specific instructions on installing this appliance with an alternative Vokera flue system, e.g. 80/125mm; please refer to the instructions supplied with the specific flue system, or download the instructions from the Vokera website. The appliance flue outlet elbow can be rotated through 360º on its vertical axis. In addition the flue may be extended from the outlet elbow in the horizontal plane (see 2.9). A reduction must also be made to the maximum length (see table below) when additional bends are used.

Reduction for additional bends

Bend	Reduction in maximum flue length for each bend
45º bend	1.0 metre
90º bend	1.0 metre

Horizontal flue terminals and accessories

Code	Description	Length
20122759	XF standard horizontal flue kit	TBC
20122761	XT telescopic flue kit	TBC
29450123	90-degree bend	N/A
29450124	45-degree bends (2)	N/A
29450125	500mm extension	500mm
29450126	1000mm extension	1000mm
29450127	2000mm extension	2000mm
29450128	Telescopic extension	372/519mm
29450133	Rear-flue terminal kit	TBC
522	Plume management kit	1370mm
529	100mm flue brackets (5)	N/A

Using the template provided (**A**), mark and drill a 125mm hole for the passage of the flue pipe. Each horizontal terminal, incorporates an incline on the inner (60mm) pipe; this enables the terminal to be installed on a level plane. However any extended horizontal flue runs must incorporate a 3-degree fall-back from the flue terminal towards the appliance. The fixing holes for the wall-mounting bracket should now be drilled and plugged, an appropriate type and quantity of fixing should be used to ensure that the bracket is mounted securely. Once the bracket has been secured to the wall, mount the appliance onto the bracket.

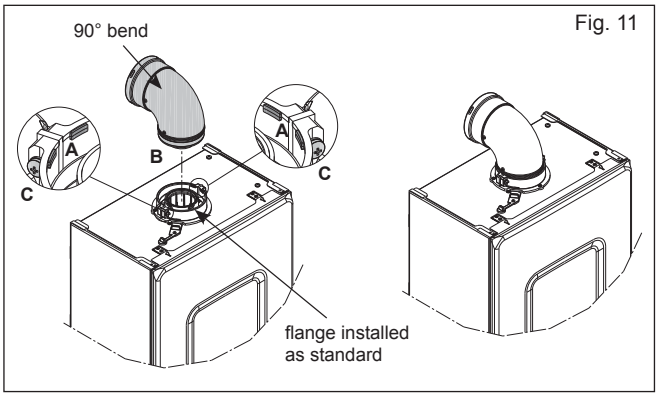

Fig. 11

FITTING THE HORIZONTAL FLUE KIT

Carefully measure the distance from the centre of the appliance flue outlet to the edge of the finished outside wall (dimension X). Add 65mm to dimension X to give you Dimension Y (see fig. 12). Measure dimension Y from the terminal end of the concentric flue pipe and cut off the excess ensuring any burrs are removed.

IMPORTANT: The X-type flue terminals are supplied with a sachet of silicone lubricant; smear a small amount of the lubricant around both inner and outer connections, at both ends of the flue bend.

NOTE: Attach the decorative white plastic trim to the flue pipe at this point if it's required.

Attach the flue bend to the flue terminal ensuring that both pipes are fully inserted into the flue bend. Insert the assembled flue terminal and bend into the pre-drilled hole and offer up the flue bend to the appliance flue spigot.

NOTE: The appliance incorporates a 'click-fit' flue connection (see fig. 11). Ensure that both screws '**C**' (fig. 11) on the 'click-fit' have been slackened off. Ensure that the bend is correctly aligned with the connector and insert the flue bend into the connector until it clicks into position (this is when the tabs at points '**A**' are located in the groove of the flue bend - see fig. 11). Both screws (**C**) should now be tightened.

NOTE: If more convenient, the flue bend can be attached to the appliance before connecting it to the flue terminal.

NOTE: Ensure that the outlet of the flue terminal is correctly orientated as shown in fig. 12.

NOTE
You must ensure that the entire flue system is properly supported and connected. Seal the flue assembly to the wall using cement or a suitable alternative that will provide satisfactory weatherproofing. The exterior trim can now be fitted.

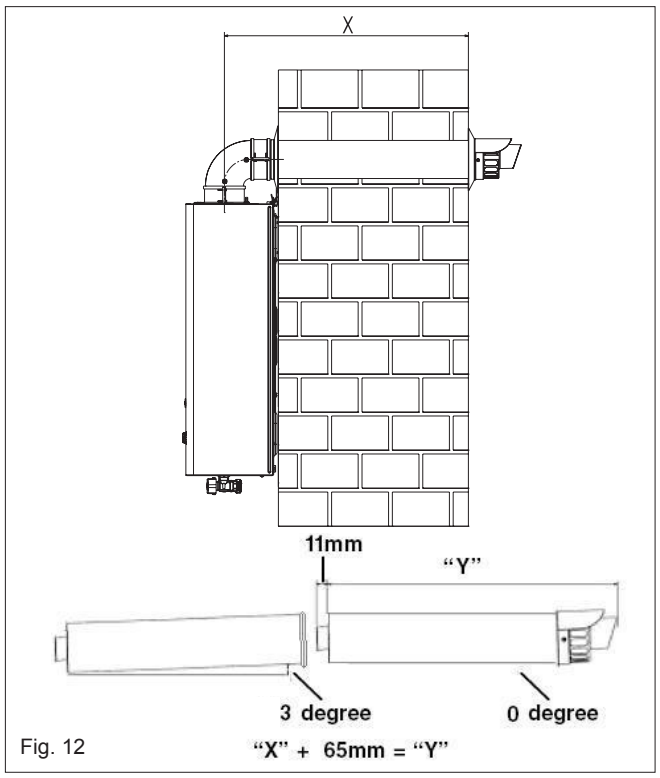

Fig. 12

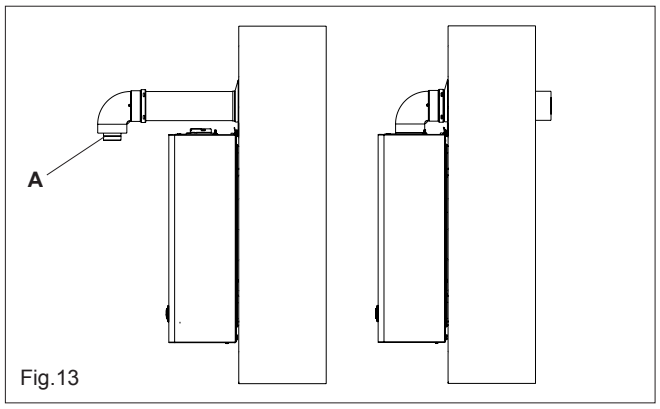

Fig.13

EXTENDING THE FLUE
Connect the bend - supplied with the flue terminal - to the appliance 'click-fit' connector.

IMPORTANT: The X-type flue terminals are supplied with a sachet of silicone lubricant; smear a small amount of the lubricant around both inner and outer connections, at both ends of the flue bend.

NOTE: The appliance incorporates a 'click-fit' flue connection (see fig. 11). Ensure that both screws '**C**' (fig. 11) on the 'click-fit' have been slackened off. Ensure that the bend is correctly aligned with the connector and insert the flue bend into the connector until it clicks into position (this is when the tabs at points '**A**' are located in the groove of the flue bend - see fig. 11). Both screws (**C**) should now be tightened. The additional bends & extensions have push-fit connections, care should be taken to ensure that the correct seal is made when assembling the flue system. Connect the required number of flue extensions or bends (up to the maximum equivalent flue length) to the flue terminal (see fig. 11-14). The flue system should have a 3º rise from the boiler to outside, to ensure any condense fluid that forms, is allowed to drain back to the appliance.

NOTE
When cutting an extension to the required length, you must ensure that the excess is cut from the plain end of the extension (see fig. 11-14). Remove any burrs, and check that all seals are located properly. You must ensure that the entire flue system is properly supported and connected. Seal the flue assembly to the wall using cement or a suitable alternative that will provide satisfactory weatherproofing. The interior and exterior trim can now be fitted.

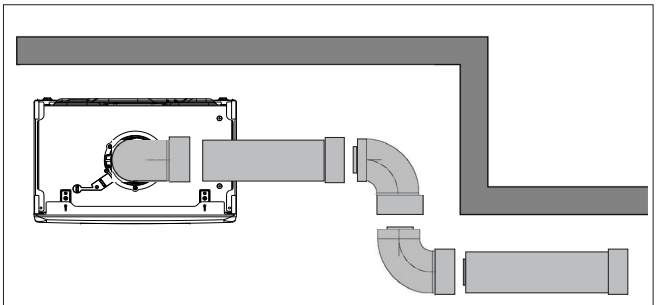
Fig. 14

5.5.1.2 FITTING THE REAR FLUE (fig. 15) (rear flue outlet only)
Refer to fig. 16 & 17 and the instructions supplied with the rear-flue kit (code 29450133) for details on how to re-configure the appliance from a top outlet to a rear outlet.
Using the template provided, mark and drill a 125mm hole for the passage of the flue pipe. The hole should be drilled LEVEL as the terminal already incorporates a fall-back to the appliance. The fixing holes for the wall-mounting bracket should now be drilled and plugged, an appropriate type and quantity of fixing should be used to ensure that the bracket is mounted securely. Once the bracket has been secured to the wall, attach the rear flue terminal to the appliance (using the previously retained screws) and fix the telescopic terminal to the correct length (wall thickness) ensuring that the terminal will protrude through the wall by the correct distance.
Once the terminal has been adjusted to the correct length, ensure that the flue outlet is orientated to the correct position, and then insert the fixing screw (supplied) and attach the sealing strip (supplied) at the flue joint.

NOTE: If required the telescopic section that incorporates the flue outlet can be trimmed to reduce its length.

NOTE: The inner 60mm pipe of the rear flue terminal must be cut by 8mm at the point indicated (fig. 15 pos. A).

At this point, lift the appliance and carefully insert the terminal into and through the wall, ensuring that the wall bracket engages with the corresponding holes at the top of the appliance.

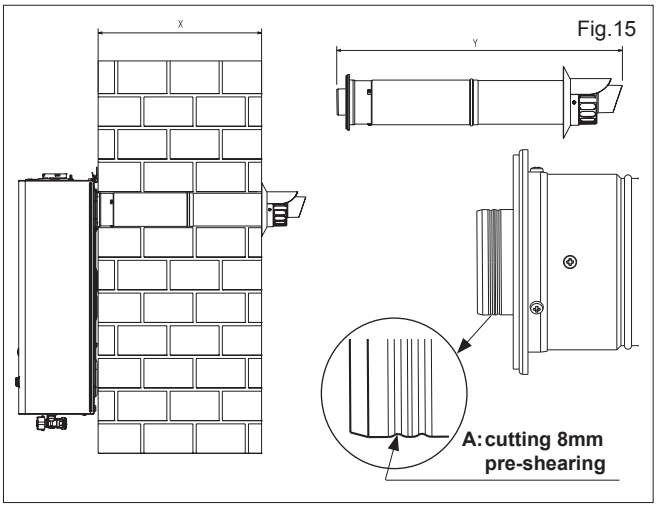

Fig.15

When reconfiguring the outlet from a top to a rear outlet, it is necessary to remove the 'click-fit' connector; replace all but one of the securing screws - using the remaining screw to secure the top outlet cap (fig. 16).

When removing the rear outlet cap; retain the 4-screws as these are required to attach the rear-flue terminal to the appliance (fig. 17).

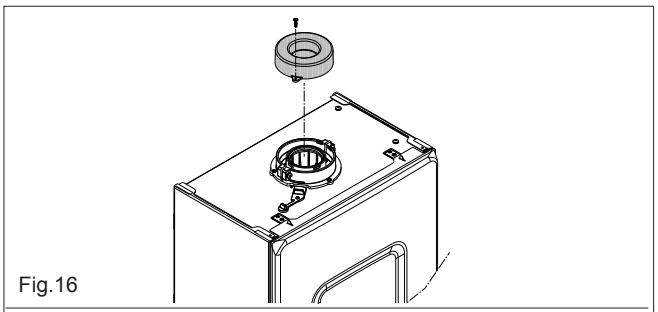

Fig.16

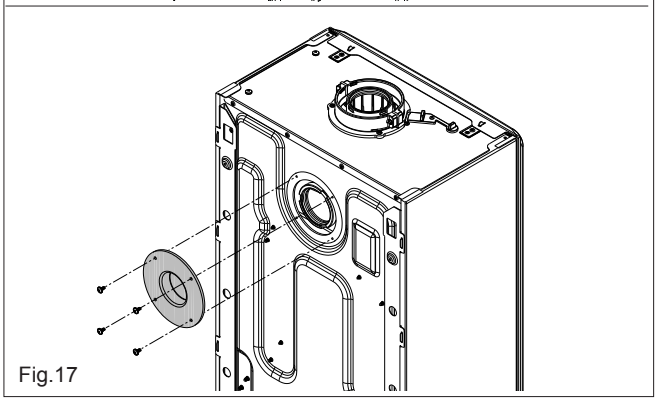

Fig.17

Seal the flue assembly to the wall using cement or a suitable alternative that will provide satisfactory weatherproofing. The exterior wall trim can now be fitted.

Part No.	Description	Length
29450133	Rear flue terminal	825mm

5.5.2 CONCENTRIC VERTICAL FLUE

Using fig.19 as a reference, cut a 110mm diameter hole in the roof and/or ceiling to facilitate the route of the vertical flue system. **NOTE:** ensure that the top of the appliance - if already in position - is covered and protected from the possibility of any dust or debris falling or entering the appliance via the flue outlet.

Fit the appropriate flashing to the roof and insert the vertical flue terminal through the flashing from outside, ensuring that the collar of the terminal is located over the outlet of the flashing.

The fixing holes for the appliance wall mounting bracket should now be drilled and plugged. An appropriate type and quantity of fixing should be used to ensure that the bracket is mounted securely. Once the bracket has been secured to the wall, mount the appliance onto the bracket.

If the vertical flue system requires additional extensions or bends, connect these to the vertical terminal, ensuring the following:

- the maximum permitted flue length is not exceeded
- reductions to the maximum flue length have been made for any bends that are used on the vertical flue system
- any horizontal sections of the flue system, incorporate a 3-degree fallback to the appliance
- the entire flue system is fully supported and secured using the appropriate brackets
- if/when an extension is cut to a shorter length, ensure that the excess length is cut from the plain end of the extension, and that any burrs or rough edges are removed
- all seals are properly located before assembling or connecting the flue system.

IMPORTANT: The VX flue terminal is supplied with a sachet of silicone lubricant; smear a small amount of the lubricant around both inner and outer connections, at both ends of the vertical flue connector (supplied with the VX terminal).

NOTE: The appliance incorporates a 'click-fit' flue connection (see fig. 18). Ensure that both screws '**C**' (fig. 11) on the 'click-fit' have been slackened off. Ensure that the connector is correctly aligned with the 'click-fit' and insert it into the 'click-fit' until it clicks into position (this is when the tabs at points '**A**' are located in the groove of the vertical flue connector - see fig. 18). Both screws (**C**) should now be tightened.

NOTE: If more convenient, the vertical flue connector can be attached to the vertical flue terminal/extension before connecting it to the appliance.

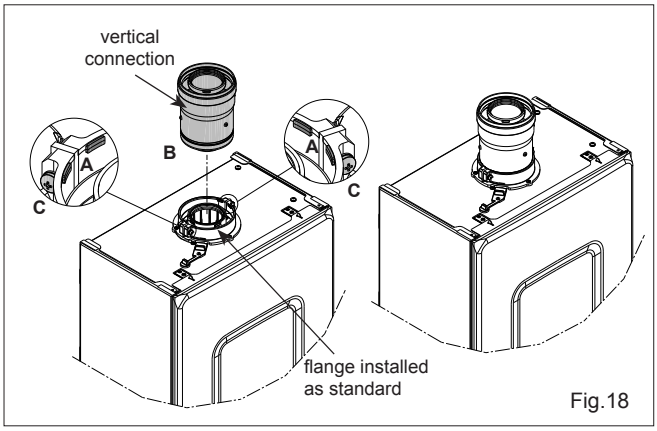

Fig.18

NOTE

Additional bends and/or extensions can be connected to the terminal connector if desired, however if additional bends are fitted, a reduction must be made to the maximum flue length (see table below).

Reduction for bends

Bend	Reduction in maximum flue length for each bend
45º bend	1.0 metre
90º bend	1.0 metre

Vertical flue terminal and accessories

Code	Description	Length
20122763	Vokera XV Vertical Flue kit	1000mm
29450123	90-degree bend	N/A
29450124	45-degree bends (2)	N/A
29450125	500mm extension	500mm
29450126	1000mm extension	1000mm
29450127	2000mm extension	2000mm
29450128	Telescopic extension	372/519mm
529	100mm flue brackets (5)	N/A
531	Pitched roof flashing	N/A
532	Flat roof flashing	N/A

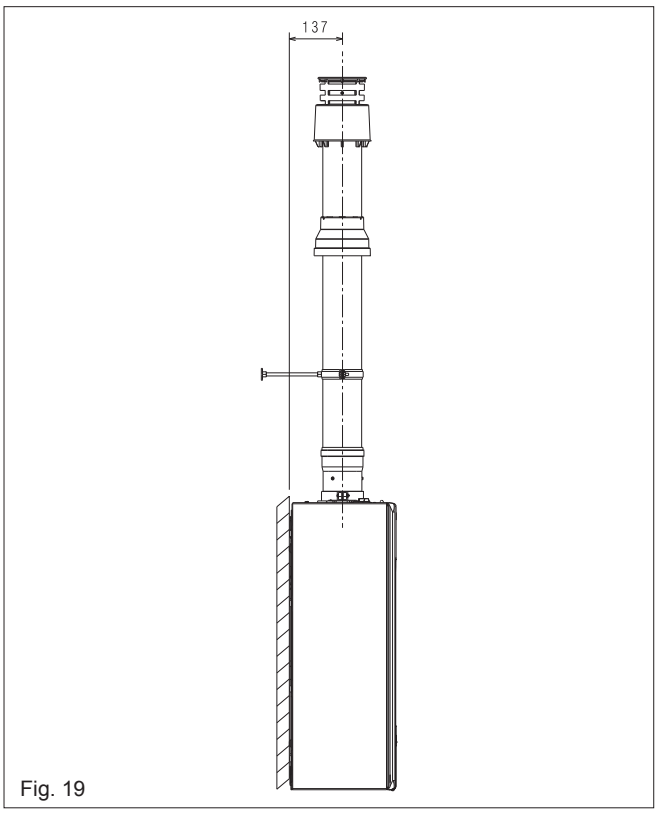

Fig. 19

IMPORTANT

The vertical flue terminal is 1.0 metre in length and cannot be cut; therefore it may be necessary to adjust the height of the appliance to suit or use a suitable extension.

5.6 CONNECTING THE GAS AND WATER

The appliance is supplied with an accessory pack that includes service valves. The service valves are of the compression type. The accessory pack contains sealing washers' etc, for use with the service valves. When connecting pipe work to the valves, tighten the compression end first then insert the sealing washers before tightening the valve to the appliance.

NOTE

It will be necessary to hold the valve with one spanner whilst tightening with another.

5.6.1 GAS (fig. 20)

The appliance is supplied with a 15mm service valve, connect a 15mm pipe to the inlet of the valve and tighten both nuts.

NOTE

It will be necessary to calculate the diameter of the gas supply pipe to ensure the appliance has an adequate supply of gas.

5.6.2 FLOW & RETURN (fig. 20)

The appliance is supplied with 22mm service valves for the flow and return connections, connect a 22mm pipe to the inlet of each valve and tighten both nuts.

NOTE

Depending on system requirements, it may necessary to increase the size of the flow & return pipe work after the service valve connections.

5.6.3 SAFETY VALVE (fig. 20)

Connect the safety valve connection pipe to the safety valve outlet and tighten. The discharge pipe must have a continuous fall away from the appliance to outside and allow any water to drain away thereby eliminating the possibility of freezing.

The discharge pipe must terminate in a position where any water - possibly boiling - discharges safely without causing damage or injury, but is still visible.

Fig. 20

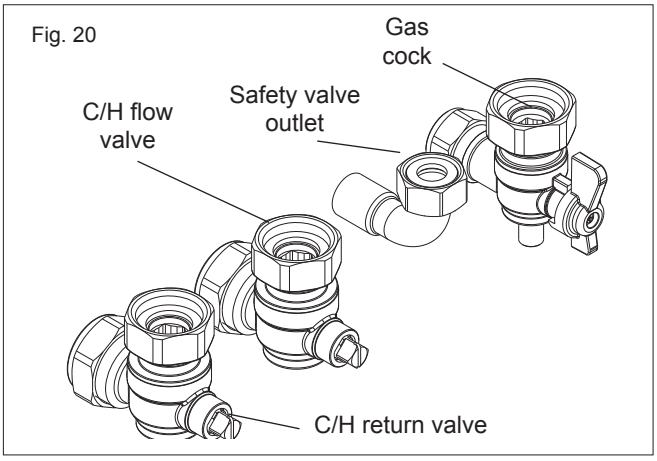

5.6.4 CONDENSATE DISPOSAL

This appliance will - under normal operating conditions - produce condensate fluid that will require to be disposed of via the dwelling's waste water drainage system.

Vokera strongly recommends that the condensate pipe is connected to the internal waste water pipework in accordance with BS6798.

BS6798 provides comprehensive instruction and advice on all permissible condensate disposal methods; notwithstanding this, it is essential that the following is strictly adhered to:

- use only plastic drainage pipe (minimum OD of 21.5mm)
- horizontal runs must incorporate a minimum 45mm fall per metre, away from the appliance
- external pipework and/or pipework in unheated areas, must have a minimum OD of 32mm and be insulated with Class-O pipe insulation
- the route, type, and termination of the condensate disposal method, must not permit any spillage of condensate fluid, into the dwelling in the event of a blockage or freezing of the condesate pipework.

Should it not be possible to route and terminate the condensate pipework internally using 'gravity discharge'; Vokera recommends that the Vokera condensate pump (code 404) be considered as an alternative solution.

Ensure that the end-user is aware of the effect/consequences of the condensate pipework becoming blocked or frozen.

5.7 ELECTRICAL CONNECTIONS

The boiler is supplied with a fly-lead. This lead can be used for connection to the electrical supply. Connect the fly-lead to a fused plug or fused isolator in the following way:

- brown wire to LIVE supply
- blue wire to NEUTRAL supply
- green/yellow to EARTH connection.

Insert the supplied 3-AMP fuse into the fused isolator or fused plug. Should the fly-lead be unsuitable, refer to 5.7.3 for details on how to connect the electrical supply directly to the boiler.

The electrical supply must be as specified in section 4/4A. A qualified electrician should connect the appliance to the electrical supply. If controls - external to the appliance - are required, a competent person must undertake the design of any external electrical circuits, please refer to section 8 for detailed instructions. ANY EXTERNAL CONTROL OR WIRING MUST BE SERVED FROM THE SAME ISOLATOR AS THAT OF THE APPLIANCE. The supply cable from the isolator to the appliance must be 3-core flexible sized 0.75mm to BS 6500 or equivalent. Wiring to the appliance must be rated for operation in contact with surfaces up to 90 ºC.

The appliance is supplied with a 'D-sub' interface, that enables various control configurations to be connected to the appliance without any need for the removal of the casing.

NOTE: The appliance will enter a fault condition if/when the D-sub interface is removed or incorrectly attached to the appliance. For detailed wiring information and schematic diagrams see Section 8.

D-sub Interface

- Loosen cover retaining screws (**V**) and remove cover.
- Refer to fig. 22 and below for relevant wiring connections for the envisaged controls regime:
  - TA (5 & 6) - for use with a 'voltage-free' control, e.g. room thermostat and/or clock (remove link wire)
  - OT+ (13 & 14) - for use with BeSMART control
  - SE (11 & 12) - for use with an external temperature sensor
  - TBT (9 & 10) - for use as a fail-safe if/when an external device fails, e.g. condensate pump.
- Make the required connections.
- Replace cover and re-tighten securing screws.
- Press and hold both tabs and insert the D-sub interface into the D-sub socket on the appliance underside (fig. 21).
- Tighten the securing screw **V1**.

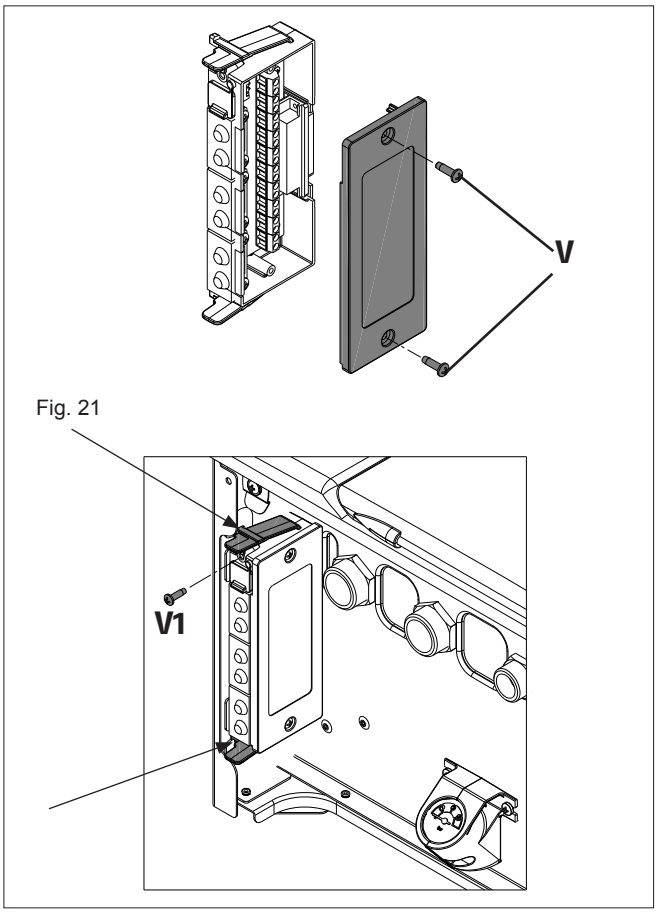

Fig. 21

Fig. 22

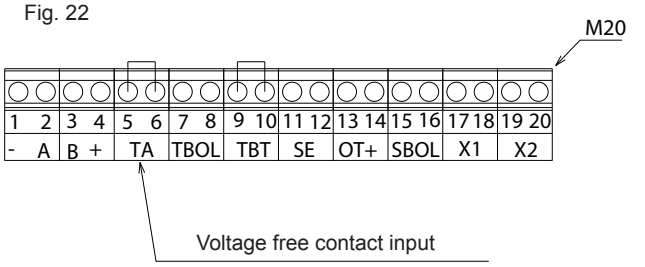

1-2-3-4	(- A B +)	Bus 485
5-6	TA	Room thermostat (contact must be free of voltage)
7 - 8	TBOL	Not used
9-10	TBT	Low temperature limit thermostat
11-12	SE	Outdoor temperature sensor
13-14	OT+	Open therm
15-16	SBOL	Not used
17-18	X1	Not used
19-20	X2	Not used

Opentherm Control
When an OT control is connected to the appliance, the UI screen will display 'Opentherm Connected'. The control functions of the appliance UI will be transferred to the OT control, which can then be used to set/adjust the main heating zone settings and the hot water settings.

UI Functions When OT Control is Connected
STATE function is disabled on the UI and must be set/adjusted via the OT control. The outlet HW temperature cannot be adjusted via the appliance UI, and is set/adjusted via the OT control.

INFO Menu
When an OT control is connected, the info menu will display the HW set-point instead of the HW flow-rate.

NOTE
All/any functions of the 'main' zone are disabled on the appliance UI and can only be accessed/adjusted via the OT control.

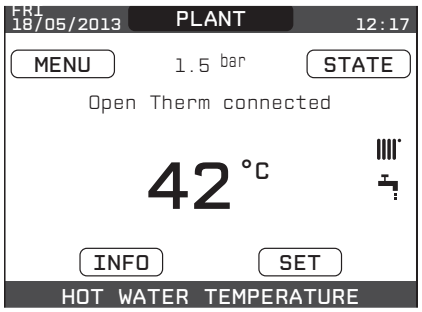

5.7.1 FRONT COVER REMOVAL

Refer to fig. 23.
- Locate and remove screws '**A**' that secure the spring clips to the underside of the appliance.
- Gently unclip the spring clips '**C**' and pull the front cover outwards and then upwards in order to disengage it from the tabs '**B**' at the top of the appliance.
- Place the front cover in a safe area to avoid any risk of damage.
- Replace in the reverse order.

REMOVAL OF SIDE PANEL/S
Remove the front cover as indicated above:
- locate and remove the 2-screws that secure the side panel to the appliance
- gently prise the side panel forward to release it from the securing tabs on the appliance rear
- replace in the reverse order.

WARNING

⚠ **DO NOT** remove the 'side' panels if/when the appliance has been installed to within the minimum clearances, i.e. 2mm.
When refitting the side panels, it is essential that the LH panel is fitted to the left side and the RH panel is fitted to the right side (refer to the attached label).

⚠ **The front cover and side panels are an intrinsic part of the 'room-sealed' element of the appliance; any damage that results in a loss of their integrity will require the replacement of the cover.**

⚠ **The noise absorbing panels that are located inside the front cover and side panels also act as seals to ensure airtightness and the room-sealed integrity of the appliance. It is essential that these are correctly positioned during the refitting of the front cover and/or side panels. Any subsequent damage or deterioration to the noise absorbing panels must be rectified before the appliance is put back into service.**

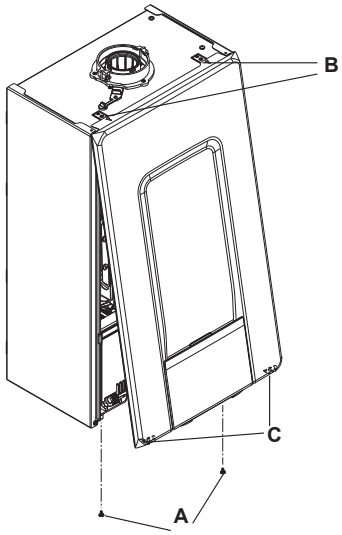

Fig. 23

5.7.2 APPLIANCE MAIN ELECTRICAL SUPPLY INPUT

The appliance is supplied with an electrical fly-lead (approx. 1.5m long) and the D-sub interface has a link wire inserted across the TA terminals (5 & 6); these measures enable the basic function of the appliance once the fly-lead is connected to the electrical supply. However if this is not suitable, then it is possible to remove and replace the 'fly-lead' with an alternative method of connection to the electrical supply.

5.7.3 CONNECTING A 230V SUPPLY TO THE APPLIANCE PCB

WARNING
Isolate the appliance from the electrical supply before carrying out this procedure.

Remove the front cover as detailed in 5.7.1. Locate the red clip that retains the control panel in the upright position and move it to the left to release the control panel.

Lower the control panel and remove the two PCB cover retaining screws (located adjacent to the PCB's front retaining clips).

Push in the two front clips, and pull out the side clip in order to release the cover and then remove the cover - lifting from the front upwards.

The 230v electrical supply input is located at the rear right hand side of the PCB (see Section-8 schematics); disconnect and remove the factory-fitted fly-lead, and use the same cable-entry point, route, and respective electrical terminals for the new 230v supply cable.

NOTE
Ensure that the Earth wire is approximately 30mm longer that the Live and Neutral wires and that each terminal screw is tight.

Carry out any relevant electrical checks as detailed in 8.5 before replacing the PCB cover; ensuring that no cables or wiring is trapped.

Refit the PCB cover screws and move the control panel back to the upright position ensuring the red securing clip, clicks into place.

Replace the appliance front cover as detailed in 5.7.1 paying attention to the importance of ensuring the cover is providing an effective seal.

NOTE
It is the installer and/or electrician's responsibility to ensure that the appliance properly earthed. Vokera Ltd. cannot be held responsible for any damages and/or injuries that result from the incorrect wiring of the appliance; or from an ineffective/defective Earth connection.

SECTION 6 - COMMISSIONING

6.1 PRELIMINARY CHECKS

Before starting up the boiler, check:

- confirm via the appliance data badge, that the appliance is suitable/configured for the gas type and electrical supply that has been provided to the appliance
- inspect the entire flue system and ensure that it has been installed in accordance with these instructions and the relevant standards that apply locally and/or nationally
- that the required clearances have been met in respect of the requirements for maintenance
- inspect the entire installation including the gas meter, test for tightness and purge. Refer to BS 6891 (I.S. 813 in ROI) for specific instruction
- ensure that the rated delivery of the gas meter is adequate enough to serve this appliance and any other gas appliance connected to the same meter
- ensure that the gas supply pipework is of adequate size to provide the maximum gas rate required by this appliance.

6.1.1 FIRST IGNITION ERRORS

- Ensure that the gas supply is ON, water supply is ON, and electrical supply is ON. Ensure that the system pressure is at least 0.6 bar.
- D-sub interface incorrectly located (alarm code E077); ensure that the D-sub interface is located within the guide slot (fig. 21).
- Pump rotator shaft seized (possible alarm code E020 and no circulation within boiler/heating system); this can occur if the appliance has been stored or inactive for a prolonged period.
- To 'release' the seized rotator shaft:
  - remove front cover as detailed in 5.7.1
  - refer to fig. 24 and locate the hole (**1**) that allows access to the shaft centre screw (**a**)
  - insert an N2 Phillips screwdriver (**b**) into the screw-head, gently push forward and turn the shaft with the screwdriver - this will release the rotator shaft
  - replace the front cover as detailed in 5.7.1 ensuring correct seal.

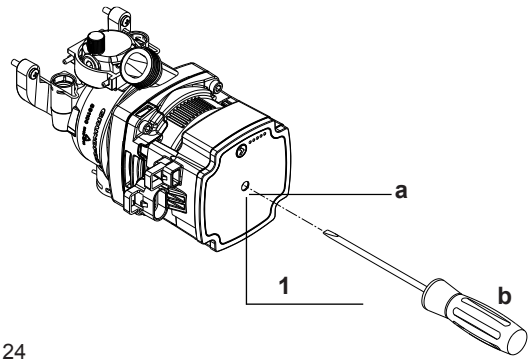

Fig. 24

6.2 PROGRAMMING THE BOILER

- Position the system's main switch to the "on" position.

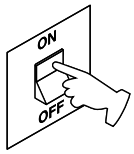

- If necessary set the TIME and DATE setting the HOURS, MINUTES, DAY, MONTH and YEAR with the keys **"up"** and **"down"**, confirming the selection.

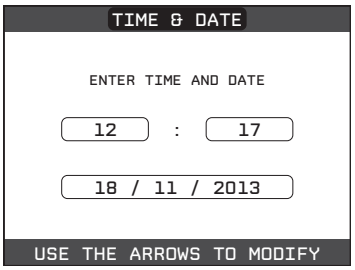

- **Note:** it is possible to change the TIME and DATE settings, as well as LANGUAGE and the duration of the back-lighting, at any time by entering the MENU from the main screen and then selecting SETTINGS.

⚠ Whenever the power supply to the appliance is interrupted and then restored, an automatic venting cycle is carried out lasting 2 min. To interrupt the vent cycle, carry out the procedure explained in the section *"6.3 First commissioning"*.

- Set the boiler to OFF ⏻ from REC10 selecting the status menu and then BOILER.

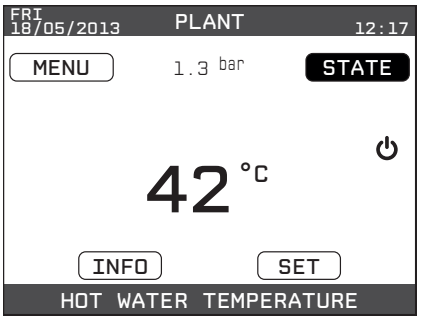

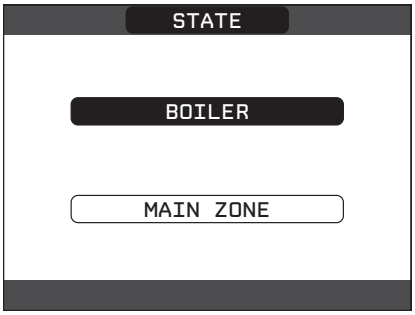

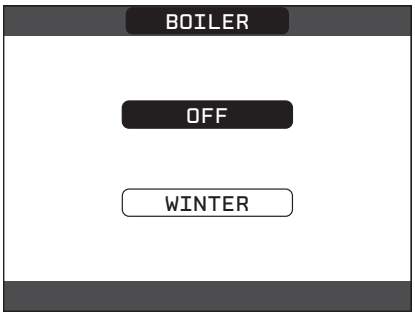

- Through the REC10 it is possible to access, using the TECHNICAL menu, a series of parameters that can be programmed to allow you to personalise the operation of the boiler based on the type of system.
- Then set the parameters according to the desired operating modes.

6.2.1 BOILER CONFIGURATION

The REC10 UI is supplied with a default configuration that enables a standard type of external control, e.g. room thermostat & clock, programmable room thermostat, etc. to be connected to the appliance or alternatively the Vokera BeSMART OT+ control. Alternatively and if desired the embedded 7-day clock can be enabled (default is disabled) to control the ON/OFF time schedule for the central heating. In order to enable the embedded clock, it is necessary to access the 'INSTALLATION' parameters as defined in section 8 (see also menu hierarchy on page 18).

NOTE

Do not enable the embedded clock if another type of timing control, e.g. time clock, programmable room thermostat, etc. is – or will be – connected to the appliance, in order to manage the heating timing schedule.

The following functions can also be accessed and adjusted via the installer parameters (see section 8 & page 18) if required/necessary.

NOTE

The 'installer' parameters should only be accessed and adjusted by suitably qualified personnel.

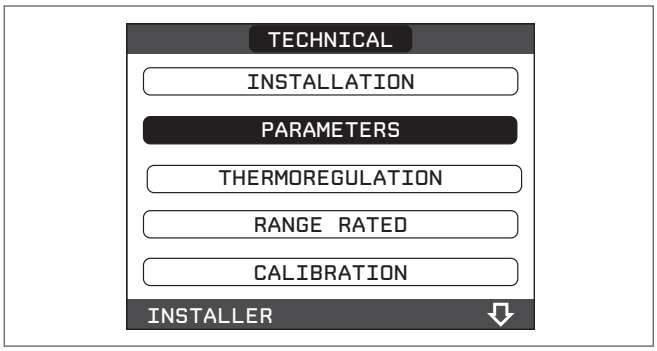

- Select from among the following options with the **"up"** and **"down"**, keys, confirming the selection.

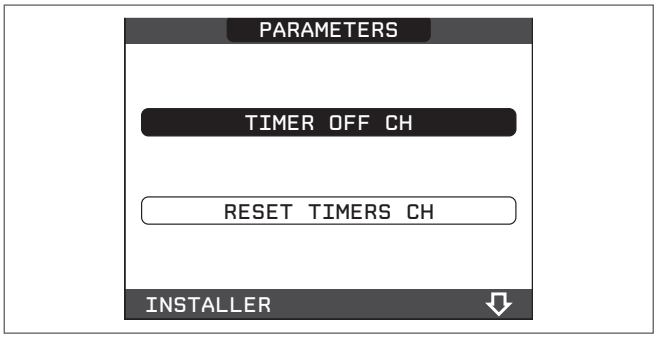

- **TIMER OFF CH**
  This parameter allows you to change the TIMER OFF CH, regarding the delay time introduced for re-igniting the burner in the face of an off due to the heating temperature being reached. The factory setting for this parameter is 3 minutes and can be set to a value between 0 min and 20 min selecting the desired one with the **"up"** and **"down"**, keys confirming the selection.

- **RESET TIMERS CH**
  This parameter allows you to reset the REDUCED HEATING MAXIMUM OUTPUT TIMING, during which the speed of the fan is limited to 75% of the maximum heating output that has been set, and the TIMER OFF CH. The factory setting for this parameter is FUNCTION INACTIVE, select FUNCTION ACTIVE using the keys **"up"** and **"down"**, confirming the selection for resetting the timings.

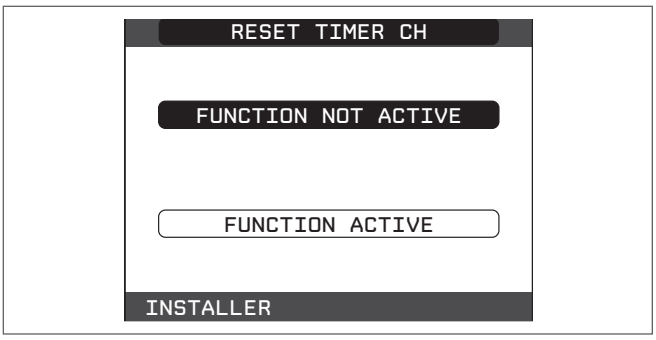

6.2.2 CONFIGURATION OF THE ZONE

It is possible to customise the management of the heating zone by accessing the ZONES MANAGER menu.

- Access the technical parameters as explained in the section *"3.1 Access to the technical parameters"*.
- In sequence select INSTALLATION, ZONES MANAGER and MODIFY ZONE with the **"up"** and **"down"** keys, confirming the selection.

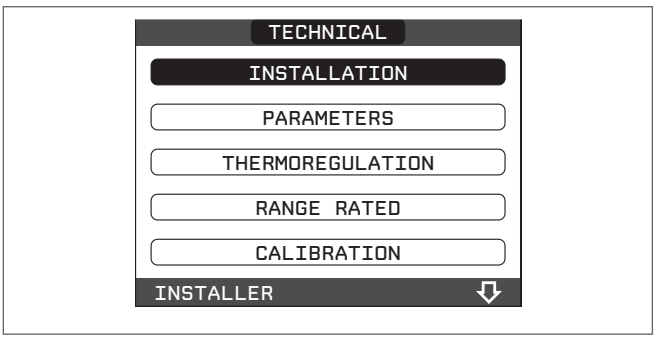

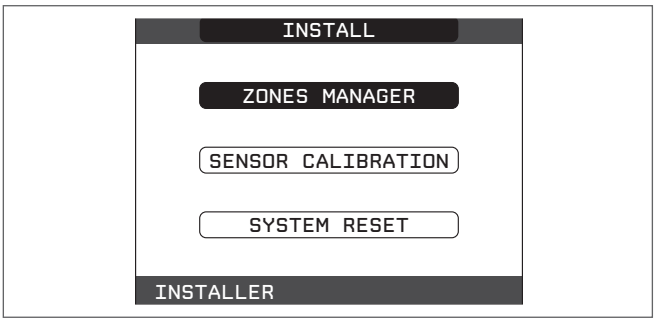

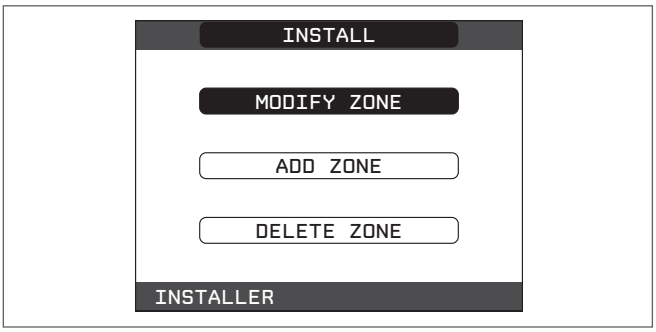

- Select the desired heating zone and then choose from among the options with the **"up"** and **"down"** keys, confirming the selection:

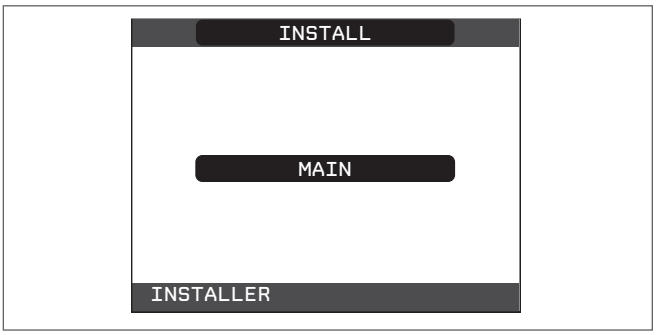

- **TYPE OF ACTUATION**
  Set the parameter in question to ITRF05/AKM (default value)
- **TYPE OF HEAT REQUEST**
  This parameter allows you to specify the type of heat request, it is possible to choose from among the following options:
  THERMOSTAT (factory setting): the heat request is generated with an ON/OFF thermostat
  REC10 MASTER: the heat request is generated by the REC10 MASTER; in this case the REC10 assumes the function of an HIU (Human Machine Interface)
- **TYPE OF ZONE**
  This parameter allows you to specify the type of zone to be heated, it is possible to choose from among the following options:
  HIGH TEMPERATURE (factory setting):
  LOW TEMPERATURE
- **MIN SET HEAT**
  This parameter allows you to specify the minimum heating setpoint that is possible (range 20°C - 80.5°C, default 40°C for high temperature systems - range 20°C - 45°C, default 20°C for low temperature systems)
- **MAX SET HEAT**
  This parameter allows you to specify the maximum heating setpoint that is possible (range 20°C - 80.5°C, default 80.5°C for high temperature systems - range 20°C - 45°C, default 45°C for low temperature systems)
- **CHANGING NAME**
  This parameter allows you to attribute a specific name to the heating zone
- **POR (embedded clock function)**
  This parameter enables or disables the embedded clock.
  Embedded clock disabled (default) = 0
  Central heating is controlled (ON & OFF) by the room thermostat connection (TA).
  Embedded clock enabled = 1
  Central heating ON/OFF times are controlled according to the (default) heating programme, whilst room temperature is controlled via the room thermostat (TA). Ensure that the operating mode ('STATE' menu) is set to AUTO.

6.2.3 EMBEDDED CLOCK HEATING SCHEDULE

When the embedded clock is enabled (POR=1 - see above), a default heating schedule is used to manage the ON/OFF timings for each day of the week (operating mode = AUTO). if necessary, the default heating schedule can be changed according to the User's needs. Refer to section 2.10 for detailed instruction/guidance on how to access and change the default heating schedule.

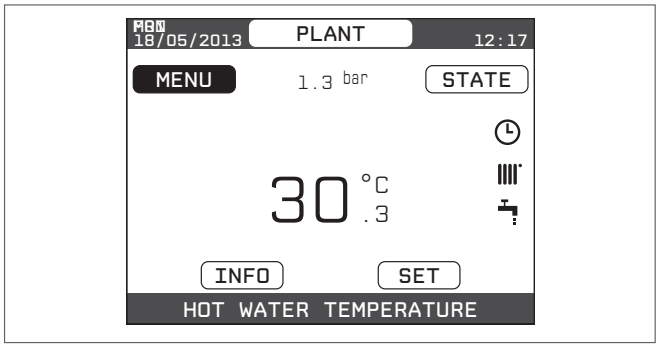

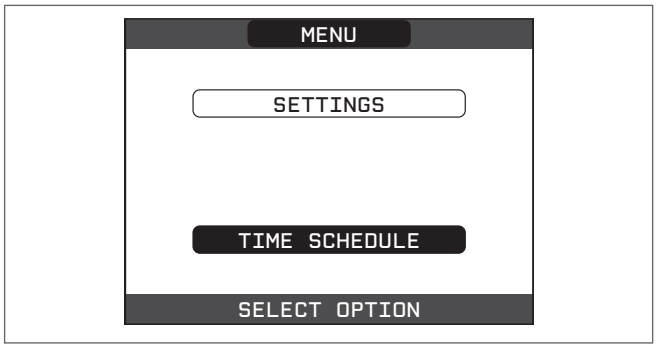

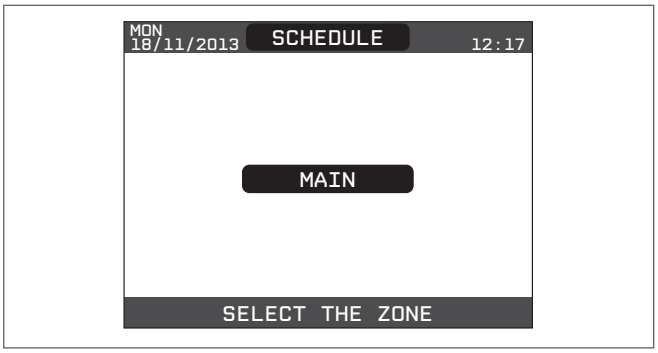

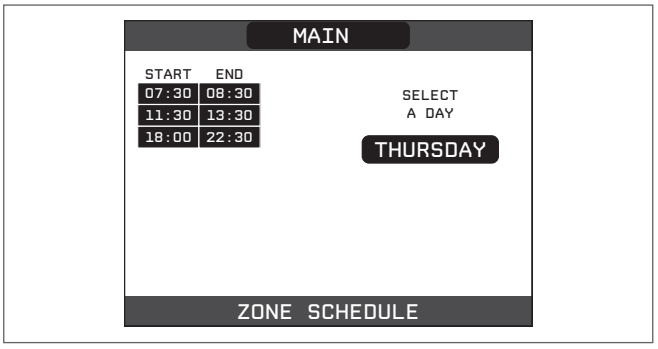

6.2.4 SETTING THE THERMOREGULATION

Thermoregulation (weather compensation) controlled by the appliance, can only be enabled if an external sensor has been installed and connected to the D-sub interface (SE terminals 11 & 12).
When the presence of an external sensor is detected, the appliance immediately enables the thermoregulation function and calculates a required outlet (flow) temperature that is based on the external temperature and the chosen climatic curve.

The temperature measured by the outdoor temperature sensor is displayed on the initial page in the top right, alternating with the display of the time.
When thermoregulation is enabled (outdoor temperature sensor present), the algorithm for automatically calculating the outlet setpoint depends on the type of heat request.
In any case, the thermoregulation algorithm will not directly use the outdoor temperature, but rather a calculated outdoor temperature that takes into account the building's insulation: in buildings that are well insulated, the outdoor temperature variations will have less impact than those that are poorly insulated by comparison. Enabling THERMOREGULATION occurs in the following way:
- select THERMOREGULATION with the **"up"** and **"down"** keys, confirming the selection.

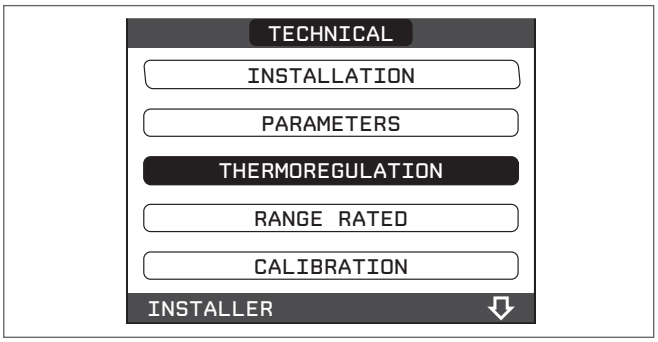

Using the REC10 it is possible to set the value of the following parameters:

BUILDING TYPE
It is indicative of the frequency with which the value of the calculated outdoor temperature for thermoregulation is updated, a low value for this setting will be used for buildings that have little insulation.
Setting range: [5min - 20min]
Factory setting: [5min]

REACTIVITY EXT SENSOR
It is an indication of the speed with which variations of the measured outdoor temperature affect the calculated outdoor temperature value for thermoregulation, low values indicate high speeds.
Setting range: [0 - 255]
Factory setting: [20]

At this point, to change the value of the previous parameters, proceed as described below:
- in sequence select THERMOREGULATION and TYPE OF BUILDING rather than REACTIVITY EXT SENSOR with the **"up"** and **"down"** keys, confirming the selection
- set the desired value with the **"up"** and **"down"** keys, confirming the selection.

Note: The value of the calculated outdoor temperature used by the thermoregulation algorithm is displayed in the INFO menu under T EXT FOR THERMOREG.

HEAT REQUEST FROM THERMOSTAT or POR (Programmable Timer)
In this case the outlet setpoint depends on the outdoor temperature for obtaining a reference ambient temperature of 20°C. There are 2 parameters that compete to calculate the output setpoint:
- slope of the compensation curve (KT)
- offset on the reference ambient temperature.

SELECTING THE COMPENSATION CURVE
The compensation curve for heating maintains a theoretical temperature of 20°C indoors, when the outdoor temperature is between +20°C and -20°C. The choice of the curve depends on the minimum outdoor temperature envisaged (and therefore on the geographical location), and on the delivery temperature envisaged (and therefore on the type of system). It is carefully calculated by the installer on the basis of the following formula:

$$KT = \frac{\text{T. outlet envisaged - Tshift}}{\text{20- min. design external T}}$$

Tshift = 30°C standard system
25°C floor installations

If the calculation produces an intermediate value between two curves, you are advised to choose the compensation curve nearest the value obtained.
Example: if the value obtained from the calculation is 1.3, this is between curve 1 and curve 1.5. Choose the nearest curve, i.e. 1.5.
The settable KT values are as follows:
radiator system: 1.0-3.0
under floor heating system 0.2-0.8.

Using the REC10 it is possible to set the selected thermoregulation curve:
- in sequence select THERMOREGULATION and CLIMATIC CURVES with the **"up"** and **"down"** keys, confirming the selection
- select the desired heating zone with the **"up"** and **"down"** keys, confirming the selection
- set the desired climatic curve with the **"up"** and **"down"** keys, confirming the selection.

OFFSET ON THE REFERENCE AMBIENT TEMPERATURE
In any event, the user can indirectly modify the value of the HEATING setpoint inserting an offset on the reference temperature that can vary within the range -5-+5 (offset 0 = 20°C).

NIGHT COMPENSATION
Whenever a programmable timer is connected to the ROOM THERMOSTAT input, from the TECHNICAL\ THERMOREGULATION\CLIMATIC CURVES\MAIN the NIGHT COMPENSATION function can be enabled.
In this case, when the CONTACT is CLOSED, the heat request is made by the flow sensor, on the basis of the outdoor temperature, to obtain a nominal ambient temperature on DAY level (20°C).

The opening of the contact does not produce a switch-off, but a reduction (parallel translation) of the climatic curve on NIGHT level (16°C).
Also in this case, the user can indirectly modify the value of the HEATING setpoint inserting once again an offset on the reference DAY temperature (20°C) rather than NIGHT (16°C) that can vary within the range [-5 - +5].

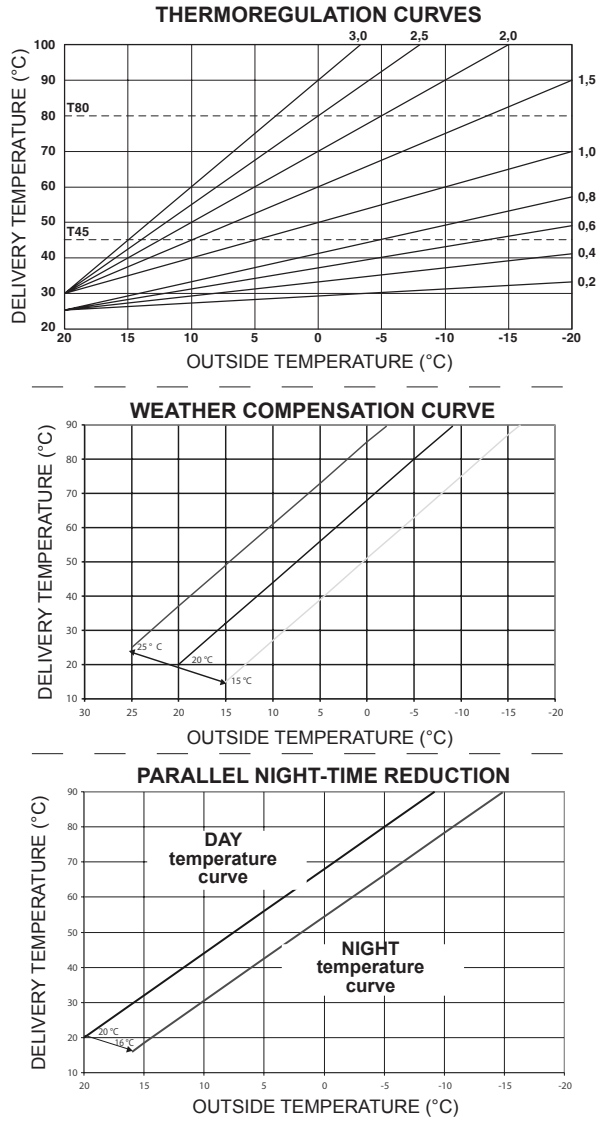

T80 std systems heating temperature set point (jumper pos.1 not inserted)
T45 floor systems heating temperature set point (jumper pos.1 inserted)

6.3 FIRST COMMISSIONING

- Carry out the procedure as detailed in section 6.1.
- Ensure that all services (gas, water, electricity) are supplied and turned ON at the appliance.
- Ensure that the appliance has been set to WINTER (access via STATE menu).
- Ensure that any time control and/or temperature control is calling for heat.

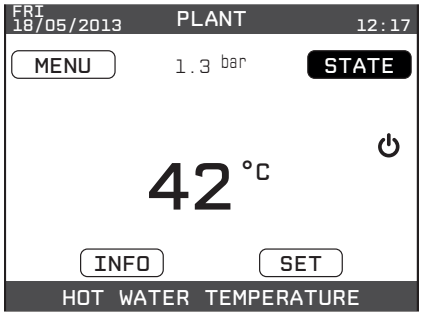

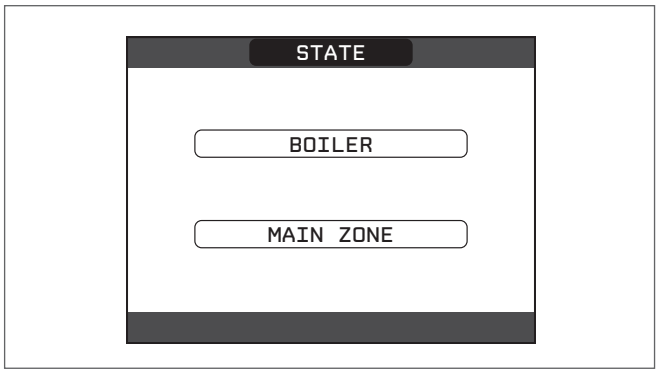

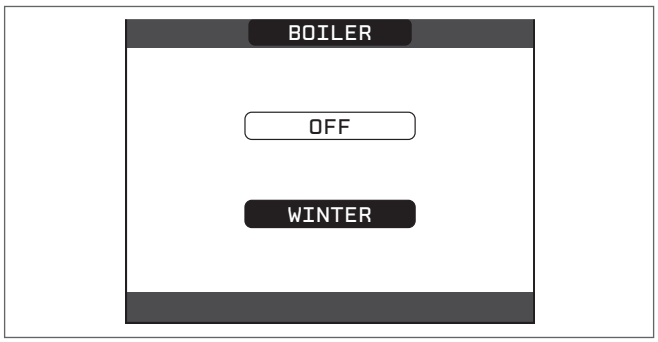

- When any heat request is generated and the burner is lit, the "🔥" icon appears on the display. The boiler will start up and continue working until the set temperatures are reached, after which it will then go back to standby.

VENT CYCLE FUNCTION

⚠ When the appliance is switched on for the first time or whenever the electrical supply has been switched off and then restored, an automatic vent cycle is carried out lasting 15 min. When the vent cycle is in progress, all heat requests are paused and a sliding message at the foot of the page appears on the main page of the REC10.

In this condition the green and red LEDs are alternately displayed every 0.5 second.

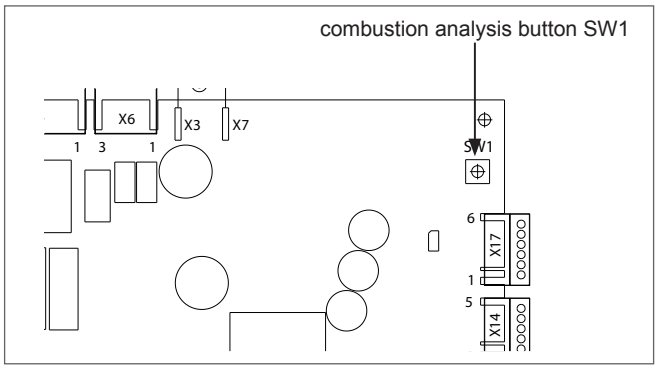

⚠ The vent cycle can be interrupted from the TECHNICAL menu of the REC10:

- select VENT CYCLE with the **"up"** and **"down"** keys, confirming the selection

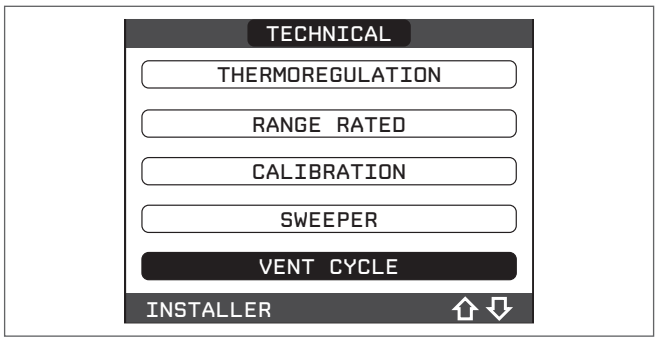

- select STOP FUNCTION with the **"up"** and **"down"** keys, confirming the selection.

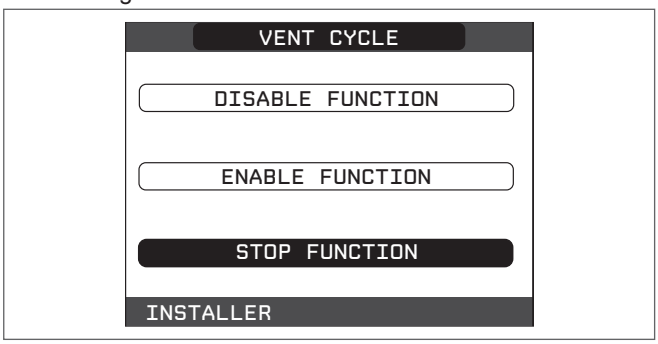

The REC10 will briefly display a wait message after which you will automatically be taken to the main screen.

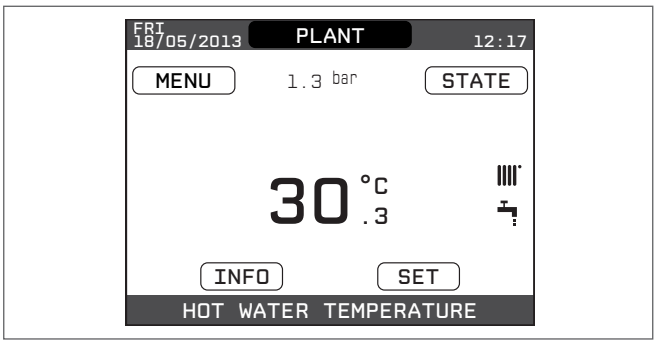

WINTER ▦ / 🚰: when the operating mode is set to WINTER (STATE>BOILER>WINTER). The operating mode of the appliance is set to react to any request for heating and/or hot water via the relevant control, e.g. room thermostat, cylinder thermostat, etc.

NOTE

The main zone also needs to be set to ON (embedded clock disabled) or AUTO/MANUAL (embedded clock enabled) in order for the appliance to provide heating.

The UI will display the flow outlet temperature is displayed.

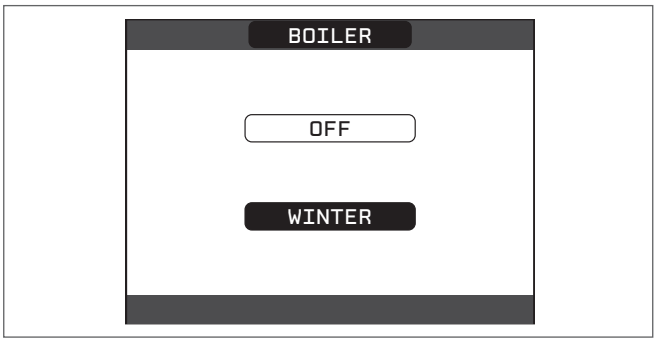

6.4 ADJUSTING THE HEATING WATER TEMPERATURE WITHOUT AN OUTDOOR TEMPERATURE SENSOR CONNECTED

When there is no outdoor temperature sensor, the boiler operates at a fixed-point, the HEATING setpoint in this case can be set selecting SET on the main screen of the REC10 and selecting the desired value within the range [40°C - 80.5°C] for high temperature systems or [20°C - 45 °C] for low temperature systems (default is high temperature).

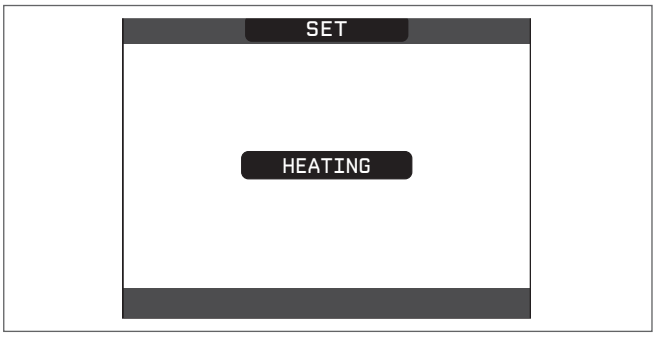

6.5 ADJUSTING THE HEATING WATER TEMPERATURE WITH AN OUTDOOR TEMPERATURE SENSOR CONNECTED

When an outdoor temperature sensor is installed, the outlet temperature is automatically selected by the system, which quickly adjusts the ambient temperature according to the variations in the outdoor temperature. If you want to change the temperature, raising it or lowering it with respect to that automatically calculated by the electronic board, it is possible to change the HEATING setpoint by selecting SET on the main screen of the REC10 and selecting within the range (-5 - +5) the desired comfort level (see section *"6.2.4 Setting the thermoregulation"*).

Note: when there is an outdoor temperature sensor connected it is still possible to have the boiler operate at a fixed point setting the values of MIN SP HEAT and MAX SP HEAT at the desired HEATING setpoint.

6.6 BOILER START-UP

In order to initiate a heating request, it is essential that any time or temperature control is set to an ON period and at a higher than current ambient temperature respectively.

The boiler will be in standby until the burner switches on following a heat request.

The display shows "🔥" to indicate the presence of a flame.

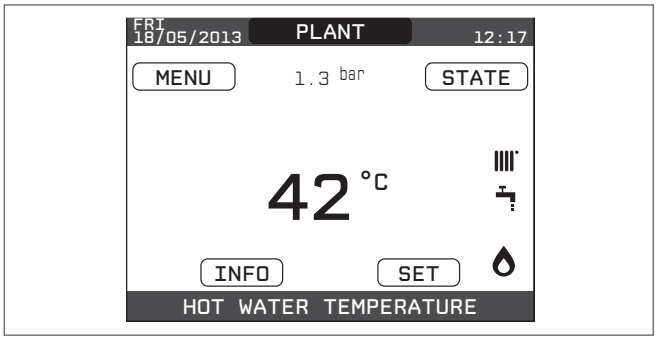

During any heating request, the appliance will attempt to reach and maintain the selected set point, at which point it will modulate the fan speed to maintain the set outlet temperature. Should the outlet temperature begin to exceed the set point, the burner will switch off and the pump will continue to run.

In the unlikely event of a fault or malfunction occurring, the appliance will enter a temporary or final fault condition, during which it shutdown; this is signalled via the UI by a warning triangle and a short description of the fault. For further detailed information on fault codes please refer to section 6.12.

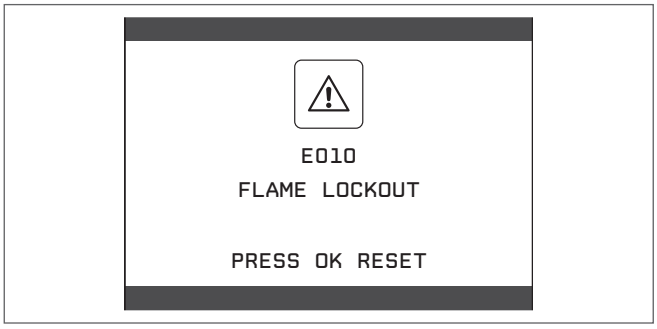

6.7 RESET FUNCTION

In the unlikely event of the appliance entering a fault condition; use the arrow buttons on the UI to navigate to the warning triangle, and press select. Then follow the instruction/advice as shown on the UI screen.

⚠ If the release attempts do not restart the boiler, contact the local Technical Assistance Centre.

6.8 SCREED HEATING FUNCTION

For a low temperature system the boiler has a "screed heating" function that can be activated in the following way:

- set the status of the boiler to OFF ⏻

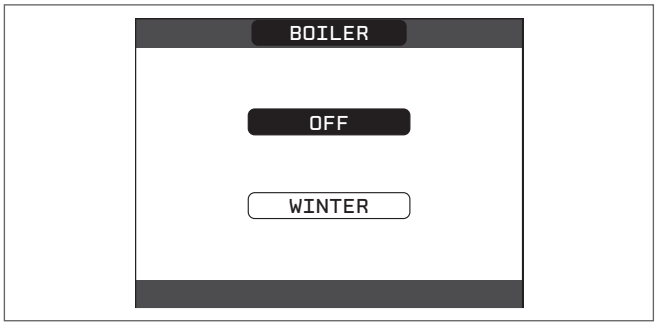

- select SCREED HEATING with the **"up"** and **"down"** keys, confirming the selection (**note:** SCREED HEATING is not available if the boiler is not OFF)

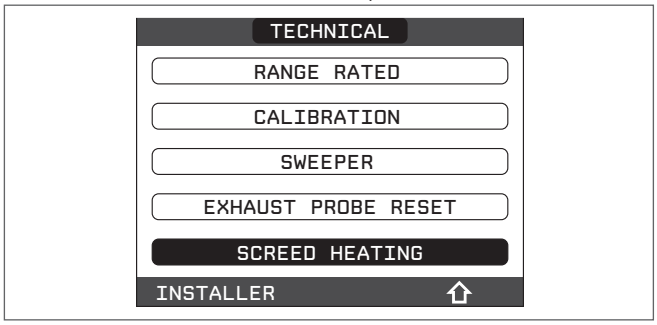

- select ACTIVATE FUNCTION with the **"up"** and **"down"** keys and confirm the selection to activate the function
- select DEACTIVATE FUNCTION with the **"up"** and **"down"** keys and confirm the selection to deactivate the function.

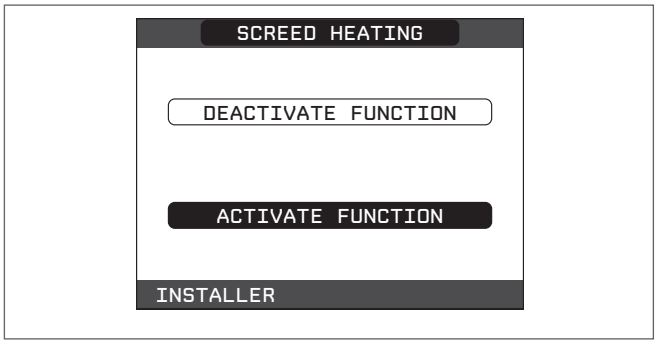

When the SCREED function is enabled, a scrolling message is displayed on the lower part of the UI screen SCREED HEATING FUNCTION IN PROGRESS - OUTLET TEMPERATURE, while on the electronic board the red and green LEDs flash alternately with a frequency of 1 sec ON - 1 sec OFF.

The "screed heating" function lasts 168 hours (7 days) during which, in the zones configured as low temperature, a heating request is simulated with an initial zone outlet of 20°C, then increased in line with the table on the side.

Accessing the INFO menu from the main page of the REC10 it is possible to display the TIME FUNC SCREED HEATING value regarding the number of hours since the start of the function.

Once activated, the function takes priority, if the appliance is shut down by disconnecting the power supply, when it is restarted the function picks up from where it was interrupted.

The function can be interrupted before its end by putting the appliance in a condition other than OFF or else by selecting DEACTIVATE FUNCTION from the relative menu.

Note: The temperature and increase values can be set to different values only by qualified personnel, only if strictly necessary. The manufacturer declines all responsibility if the parameters are incorrectly set.

DAY	TIME	TEMPERATURE
1	0	20°C
	6	22°C
	12	24°C
	18	26°C
2	0	28°C
	12	30°C
3	0	32°C
4	0	35°C
5	0	35°C
6	0	30°C
7	0	25°C

6.9 CHECKS DURING AND AFTER THE FIRST COMMISSIONING

After start up, check that the boiler carries out the start-up procedures and subsequent shut-down correctly.

NOTE

In order to perform a combustion analysis check, you should ensure that the appliance is HOT; this can be achieved by generating a heating or hot water request for several minutes:

- checking the combustion.

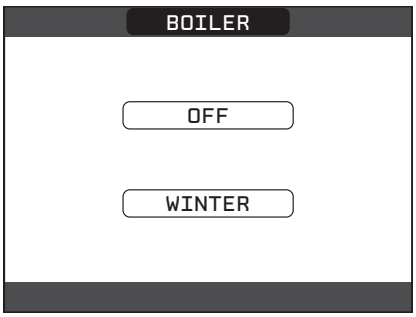

6.10 COMBUSTION CHECK

To carry out the combustion analysis, proceed as follows:

- ensure that the electrical supply to the appliance is switched ON
- set the status of the boiler to OFF ⏻
- access the technical parameters as explained in section 8
- select SWEEPER with the **"up"** and **"down"** keys, confirming the selection

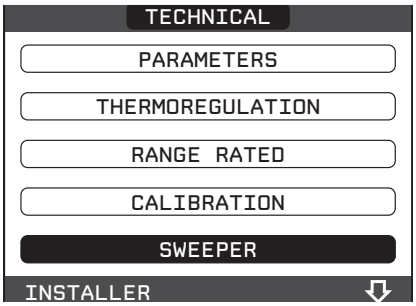

NOTE

The dynamic gas pressure can be checked by attaching a manometer to the test point located on the gas cock (please also refer to 4.3).

- select ACTIVATE FUNCTION with the **"up"** and **"down"** keys, confirming the selection.

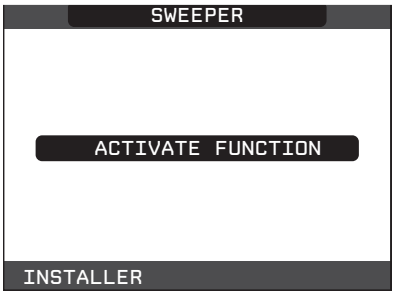

- **Note:** the sweeper function can also be activated by pressing the SW1 key on the electronic board AKM (this requires removing the plug (**C**) from the cover of the instrument panel to access the electrical components).

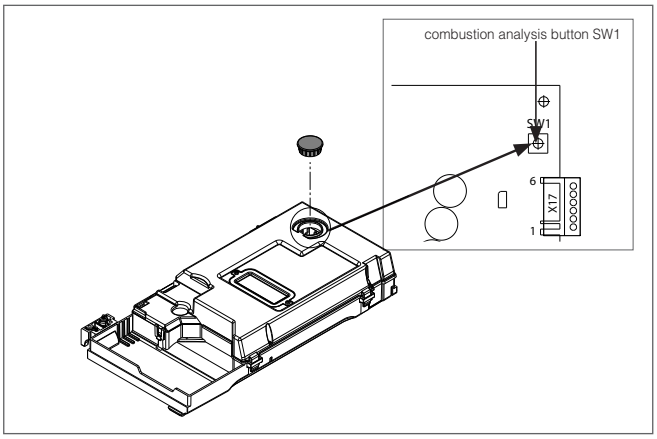

Wait for the burner to ignite.

The boiler will operate at maximum heating output and it will be possible to check the combustion.

- Insert the analyser probes in the specific positions on the air distribution box, after removing screw (**A**) and cap of the flue gases analysis socket (**B**).
- Perform the combustion check verifying that the CO_2 values correspond to those indicated in section-2 "Technical Data".
- Once completed, remove the analyser probe and close the combustion analysis test points, using the previously removed cap and screw.

⚠ Should the readings be significantly different from the values declared in the technical data table; **do not attempt to carry out any adjustment of the gas valve.** Please call the Vokera technical Helpline for assistance and further advice.

⚠ **The gas valve is non-adjustable and must not be tampered with. Tampering with the gas valve will result in the malfunction of the appliance and possible damage to components.**

⚠ When the sweeper function is in progress all the heat requests are paused and a scrolling message appears at the foot of the main page of the REC10; green and red LEDs are off.

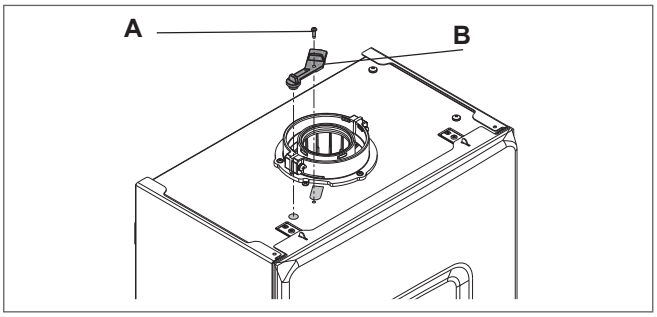

When the checks are completed:

- set the boiler to "SUMMER" or "WINTER" mode depending on the User's requirements
- regulate the heat request temperature values according to the customer's needs.

IMPORTANT

The sweeper function is active for a time limit of 15 minutes; the burner shuts down if an outlet temperature of 95° C is reached. It will ignite again when the temperature falls below 75° C.

6.11 RANGE RATED

This appliance can be 'range-rated' if necessary, and this function enables a bespoke maximum heat output to be set according to the specific application:

- access the technical parameters as explained in section 8
- select RANGE RATED

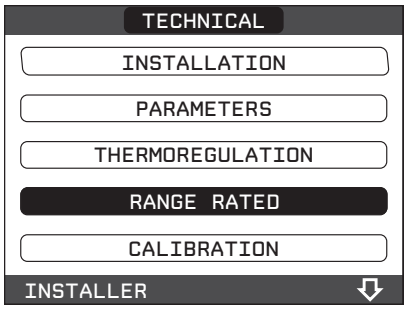

- set the desired heating maximum value (rpm) with the **"up"** and **"down"** keys, confirming the selection

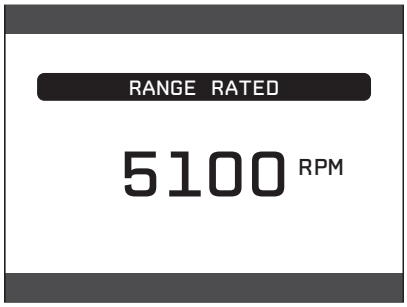

- once the desired power is set (maximum heating) note the value onto the supplied self-adhesive label. For further checks and adjustments refer to the set value.

⚠ The calibration does not affect the boiler ignition.

The boiler is supplied with the settings indicated in the technical data (section 2).
Nonetheless, it is possible to alter or limit the appliance output, according to the system requirements or the regional regulations on the combustion gas emission limits, to set that value by referring to the graphs below.

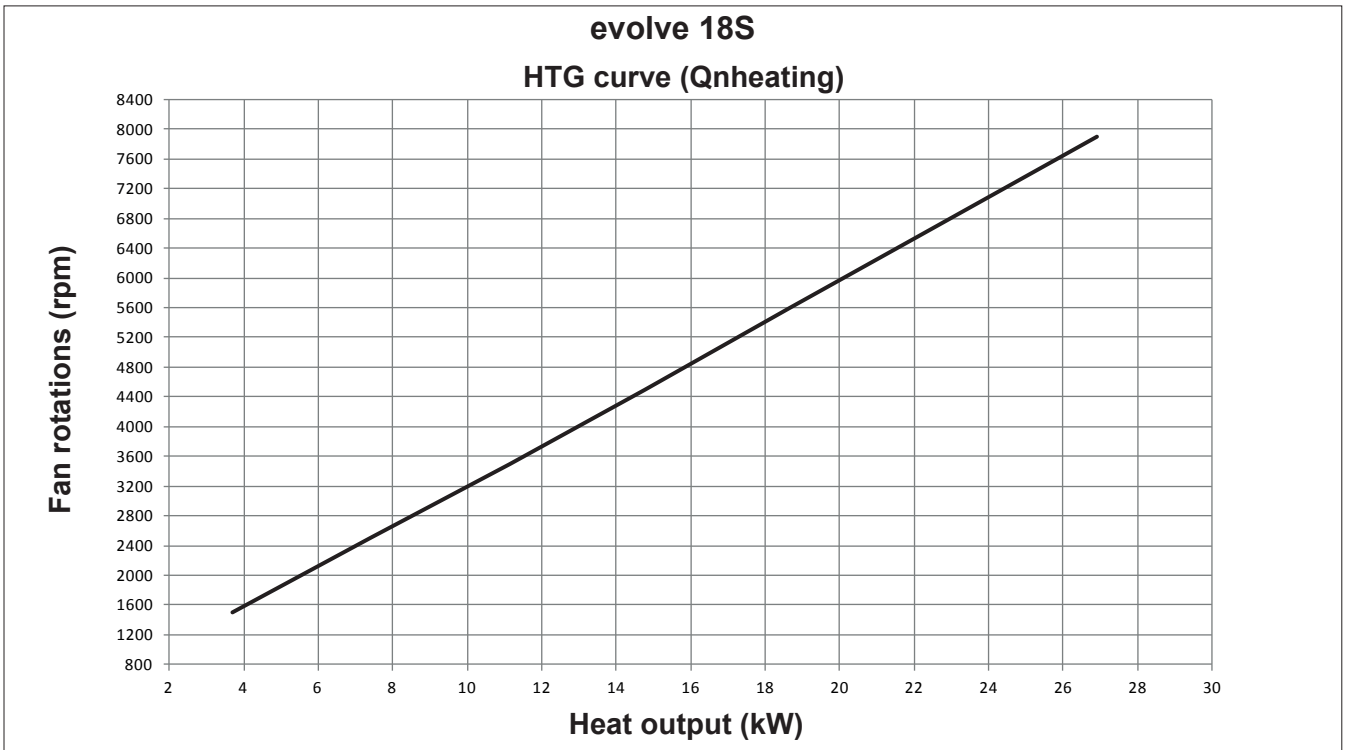

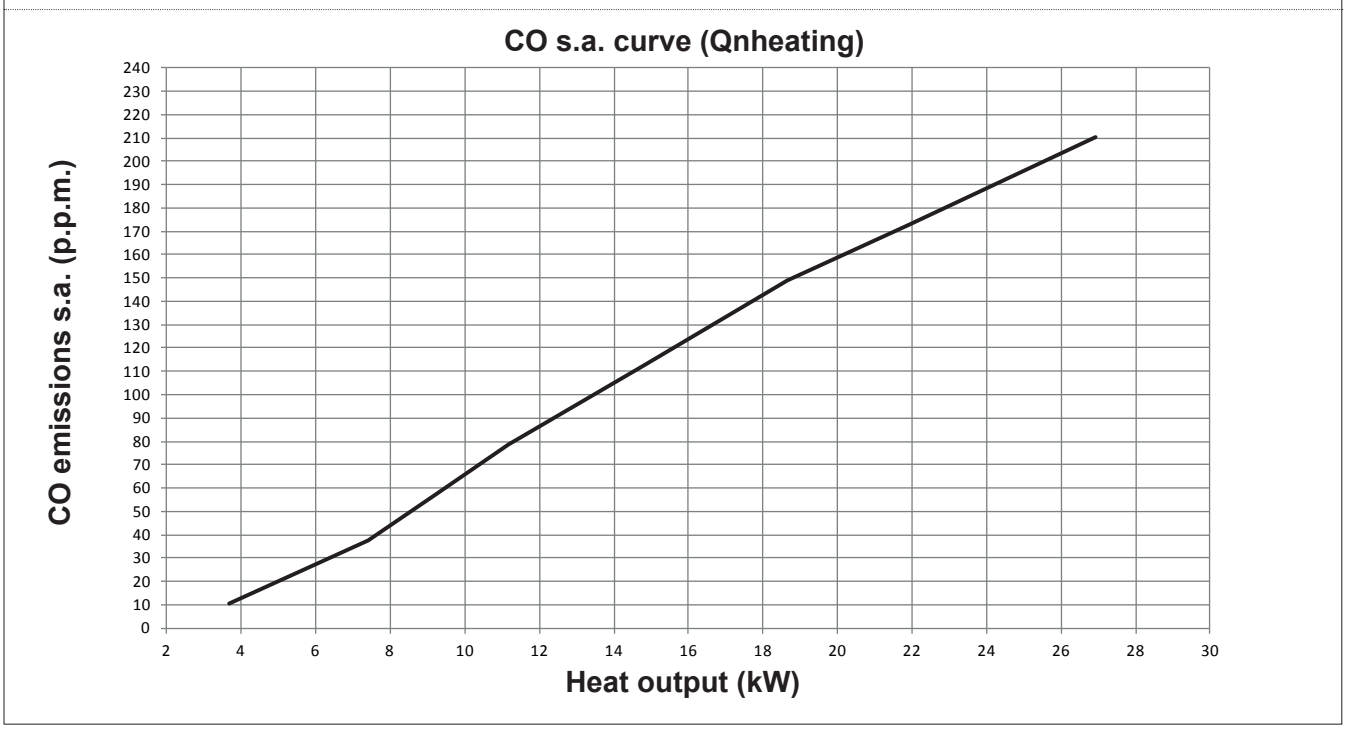

evolve 24S

HTG curve (Qnheating)

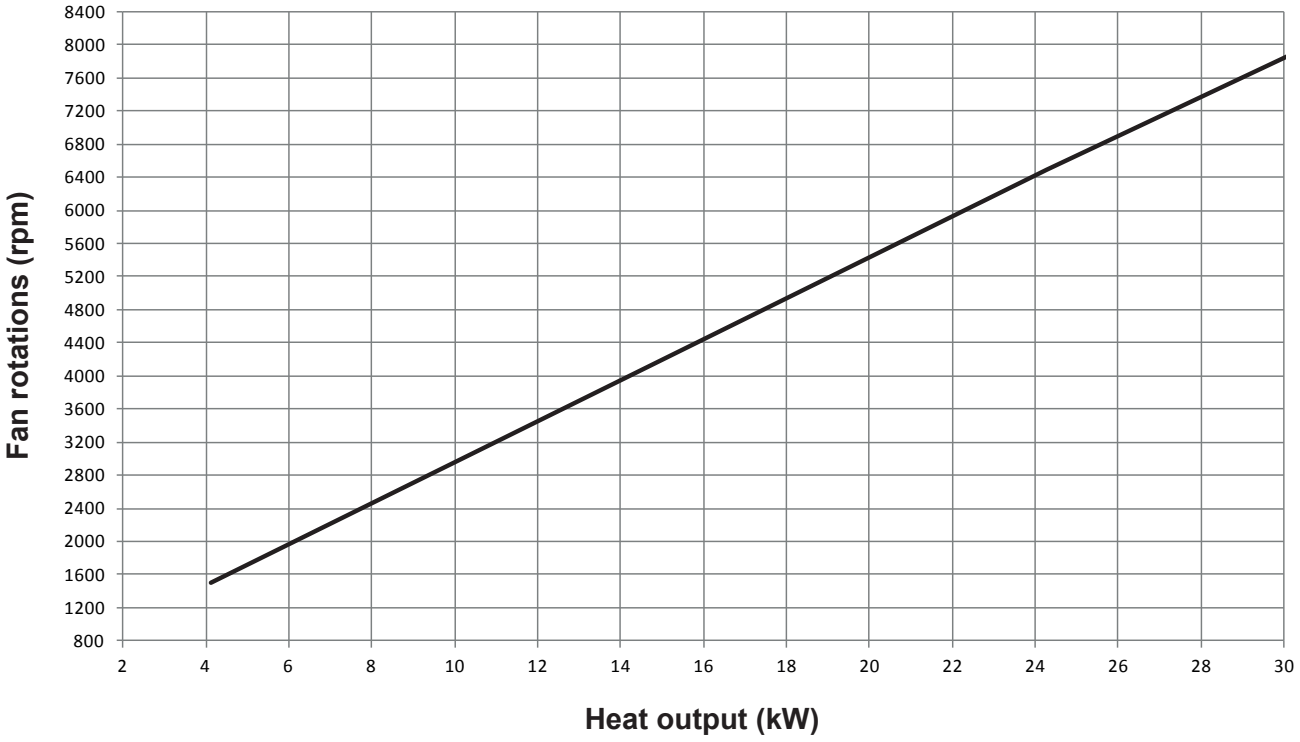

CO s.a. curve (Qnheating)

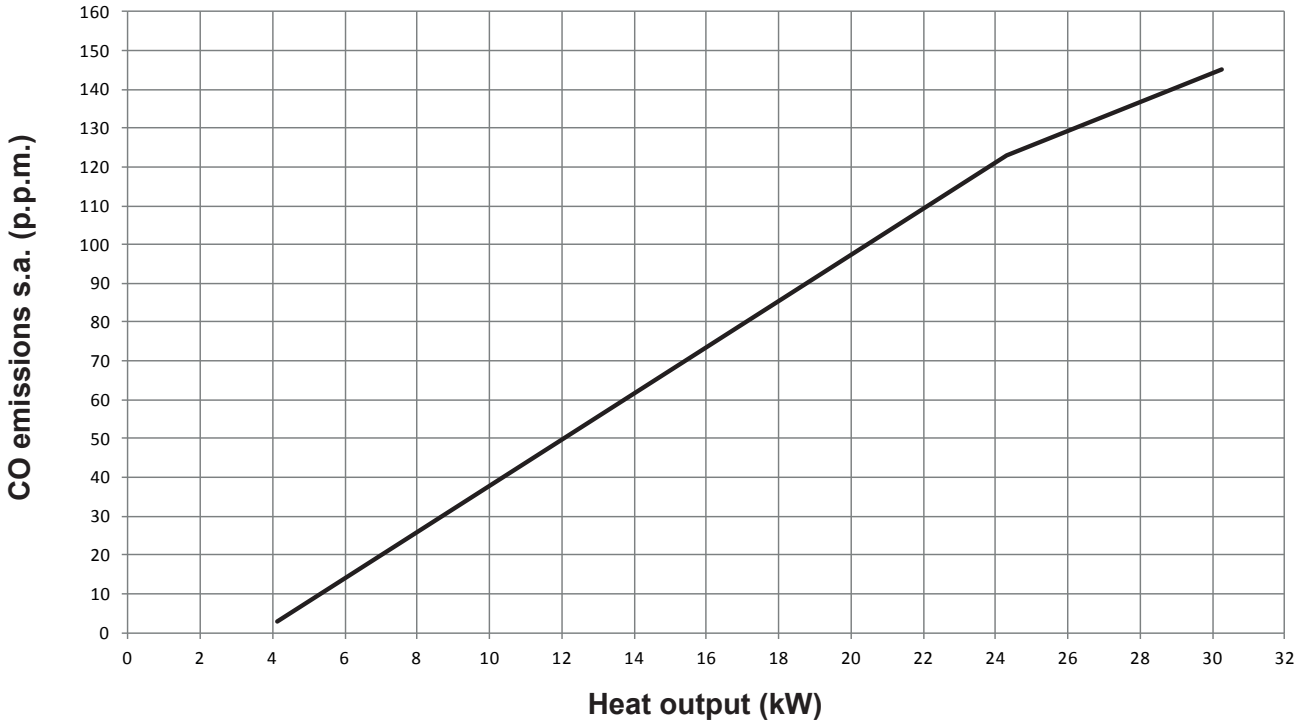

evolve 30S

HTG curve (Qnheating)

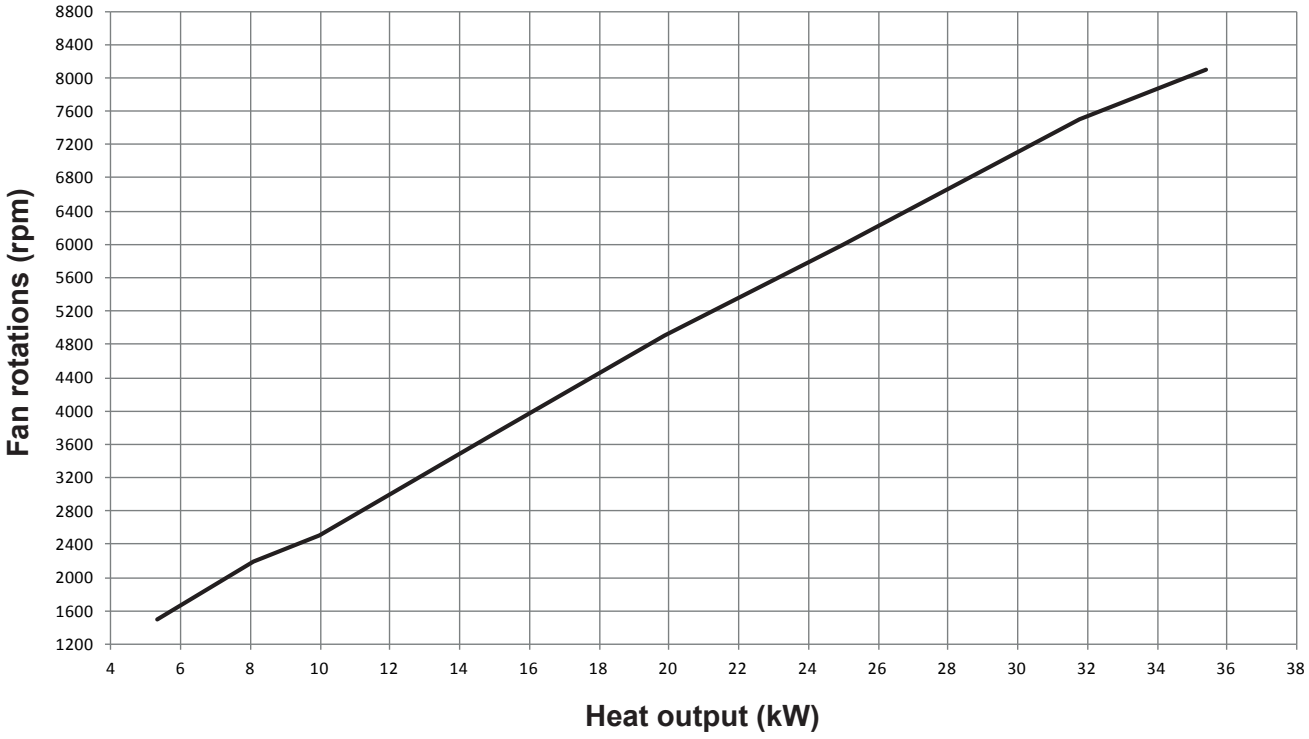

CO s.a. curve (Qnheating)

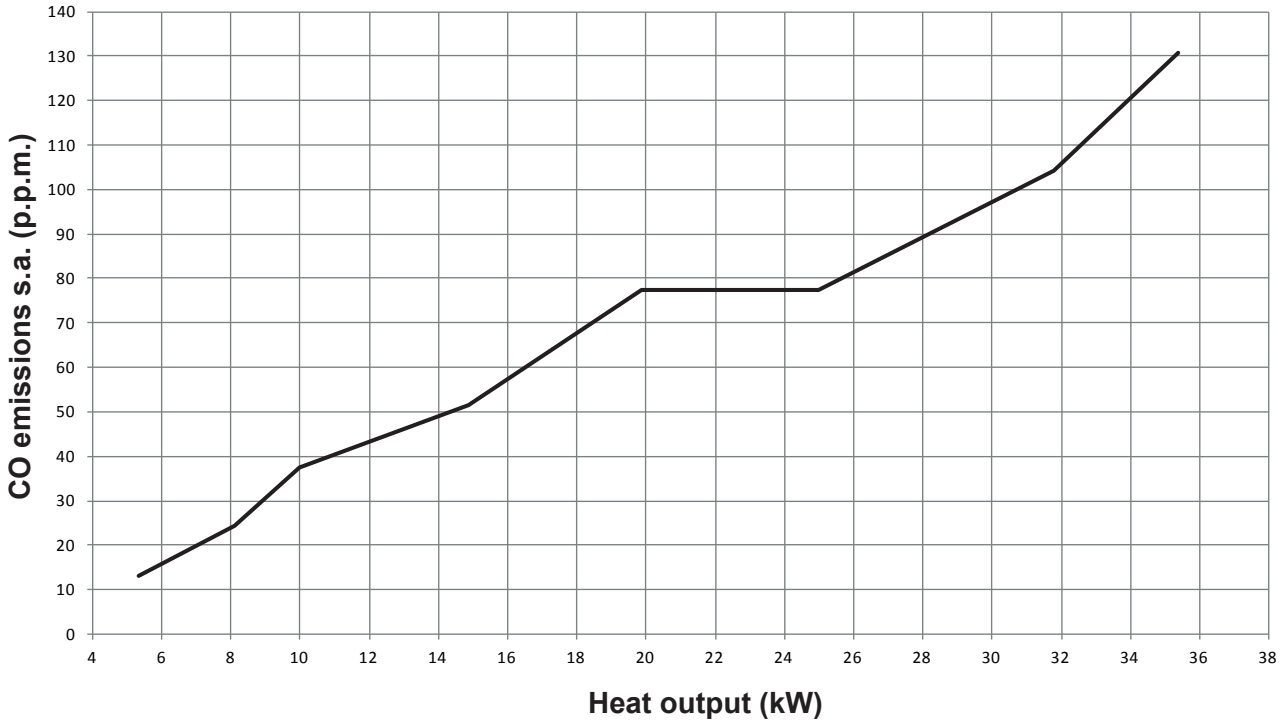

evolve 35S

HTG curve (Qnheating)

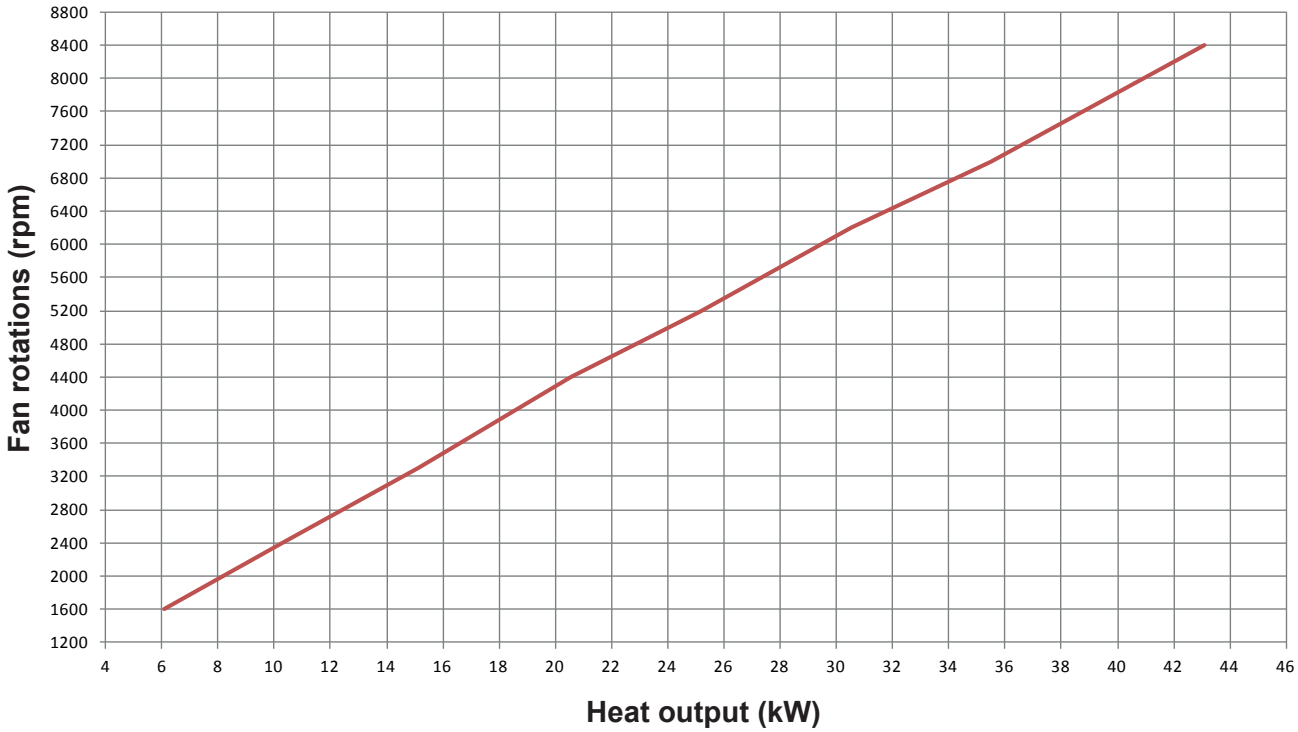

CO s.a. curve (Qnheating)

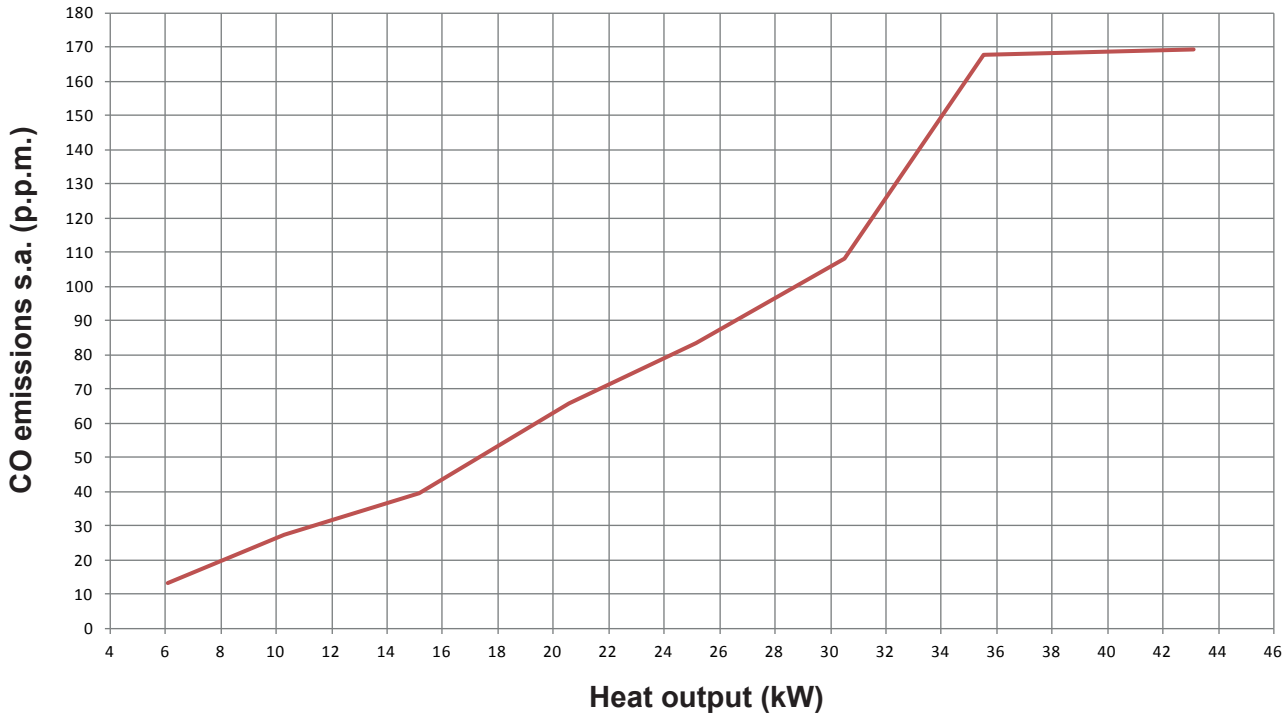

6.12 LIGHTS AND FAULTS

In the unlikely event of appliance malfunction and/or a system fault, the appliance will enter a final or temporary fault condition, whereby it will shut down and a warning triangle ⚠ will appear on the left side of the UI screen. Use the arrow buttons on the UI to navigate to the warning triangle, and press select. Then follow the instruction/advice as shown on the UI screen.

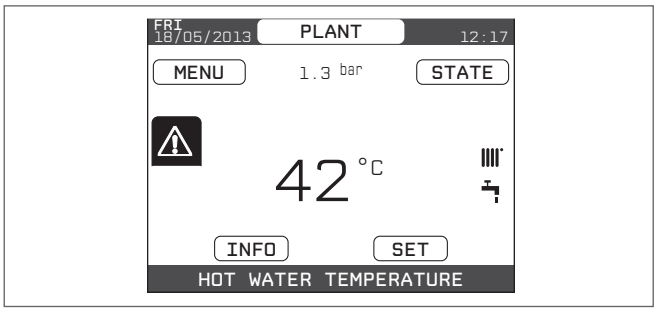

The faults description screen is automatically displayed once the display illumination time has elapsed without any button being pressed.
Press the **"up"** and **"down"** keys to display the descriptions of any other faults that may be present.

Reset function
In order to reset the boiler's operation in the event of a fault, it is necessary to access the fault description screen. If the lockout is of a non-volatile type that requires a reset procedure, this will be indicated on the screen, and can be performed by pressing the **"ok"** button on the REC10.
At this point, if the correct operating conditions have been restored, the boiler will restart automatically.
There are a maximum of 3 consecutive attempts at a release by the REC10, should all 3 attempts at reset fail, the appliance will require to be isolated briefly from the electrical supply in order to carry out any further reset attempts. Once the electrical supply supply has been restored, further attempts at reset can be carried out.

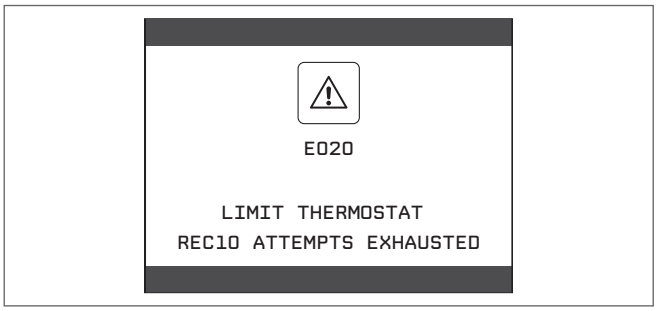

⚠ If the attempts to reset the boiler are unsuccessful, please contact the Vokera technical helpline.

For fault E041
If the pressure drops below the safety pressure limit of 0.3 bar the boiler displays the fault code "E041 - WATER TRANSDUCER LOAD THE SYSTEM" for a transitional time of 10 min during which it is possible to open the external filling tap until the pressure is between 1 and 1.5 bar.

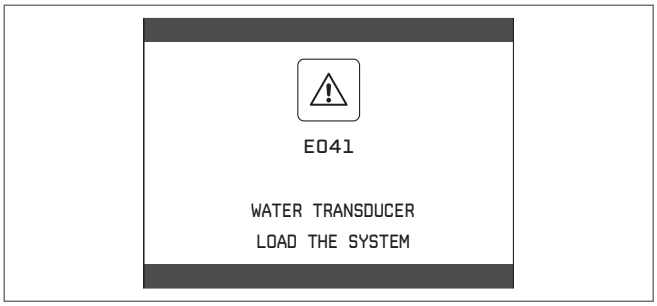

⚠ If the pressure drops frequently, contact your installer or the Vokera customer care centre.

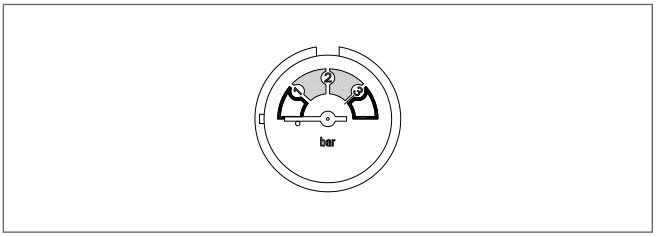

For fault E060
There is a configuration error; check that the appliance has been configured as a CH only boiler.

For fault E091
The boiler has an auto-diagnostic system which, based on the total number of hours in certain operating conditions, can signal the need to clean the primary exchanger (alarm code E091). Once the cleaning operation has been completed, reset to zero the total hour meter with special kit supplied as an accessory following procedure indicated below:
- access the technical parameters as explained in section 8
- select EXHAUST PROBE RESET with the **"up"** and **"down"** keys, confirming the selection

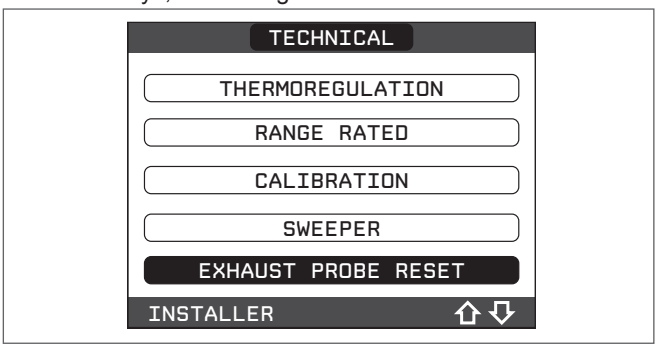

- select CONFIRM to confirm the rest of the flue gases probe meter or else CANCEL to cancel the operation

NOTE: the meter resetting procedure should be carried out after each in-depth cleaning of the primary exchanger or if this latter is replaced.
The total hours can be verified in the following way:
- select INFO on the initial screen of the REC10 and press **"ok"**

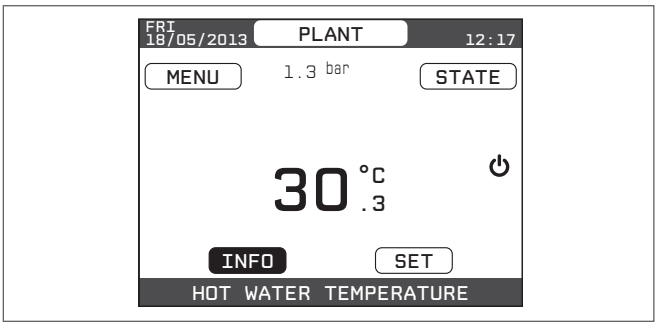

- with the **"up"** and **"down"** keys select EXHAUST PROBE RESET and press **"ok"** to display the value of the flue gases probe meter.

Boiler faults list

ERROR CODE	ERROR MESSAGE	RED LED	GREEN LED	RED and GREEN	DESCRIPTION OF ALARM TYPE
E010	flame lockout/ACF electronic fault	ON			final
E011	extraneous flame	flashing 0.2 sec. on/0.2 off			temporary
E020	limit thermostat	flashing 0.5 sec. on/0.5 off			final
E030	fan fault	ON			final
E040	water transducer - check system water pressure			ON	final
E041	water transducer - check system water pressure		flashing 0.5 sec. on/0.5 off		temporary
E042	water transducer fault			ON	final
E060	Configuration fault			flashing 0.5 sec. on/0.5 off	temporary
E070	fault flow sensor/overtemperature flow sensor/ flow/return sensor differential alarm	ON			temporary/final/ final
E077	main zone water thermostat	ON			temporary
E080	fault return line probe/return line probe overtemperature/ outlet/return line probe differential alarm	ON			temporary/final/ final
E090	fault flue gases probe/ flue gases overtemperature probe			flashing 0.5 sec. on/0.5 off	temporary final
E091	clean primary heat exchanger			flashing 0.5 sec. on/0.5 off	temporary
--	water pressure low - check the system		flashing 0.5 sec. on/0.5 off		temporary
--	water pressure high - check the system		flashing 0.5 sec. on/0.5 off		temporary
--	boiler board communication lost	ON			temporary
--	BUS 485 communication lost	ON			temporary

List of combustion faults

ERROR CODE	ERROR MESSAGE	LED RED	LED GREEN	DESCRIPTION OF TYPE OF ALARM
E021	iono alarm	ON		These are temporary alarms that if they occur 6 times in an hour they become definitive; the alarm E097 is displayed and is followed by post-purging for 45 seconds at the fan's maximum speed. It is not possible to release the alarm before the end of the post-purging unless the boiler's power supply is switched off.
E022	iono alarm	ON		
E023	iono alarm	ON		
E024	iono alarm	ON		
E067	iono alarm	ON		
E088	iono alarm	ON		
E097	iono alarm	ON		
E085	combustion fault/high CO	ON		These are temporary alarms that if they occur 3 times in an hour they become definitive; the last error to occur is displayed and is followed by a post-purging of 5 minutes at the fan's maximum speed. It is not possible to release the alarm before the end of the post-purging unless the boiler's power supply is switched off.
E094	combustion fault/high CO	ON		
E095	combustion fault/high CO	ON		
E058	mains voltage fault	ON		These are temporary faults that restrict the ignition cycle.
E065	current modulation alarm	ON		
E086	obstruction fumes alarm	ON		Temporary fault reported during the post ventilation. It is maintained a post ventilation of 5 min at maximum fan speed.

Warning lights

BOILER STATUS	RED LED	GREEN LED	RED and GREEN	NOTES
Power-on			flashing 0.5 sec. on/ 0.5 sec. off	The red and green LEDs come on at the same time
Vent cycle	flashing 0.5 sec. on/ 1 sec. off	flashing 0.5 sec. on/ 1 sec. off		The red and green LEDs come sequentially one at a time
OFF status		flashing 0.3 sec. on/ 0.5 sec. off		
No heat request (stby)		flashing 0.3 sec. on/ 0.5 sec. off		
Transitional ignition/ overtemperature		flashing 0.3 sec. on/ 0.5 sec. off		
Presence of flame		ON		
Chimney sweep		ON		Only if the flame is present
Screed heater	flashing 1 sec.on/ 1 sec. off	flashing 1 sec.on/ 1 sec. off		The red and green LEDs come on alternately

6.13 ALARM HISTORY

The ALARM HISTORY function is automatically enabled only after the machine has been powered up for at least 2 consecutive hours, during this period of time any alarms that arise would not be saved in the “alarm history”.

The alarms can be displayed in chronological order, from the most recent to the oldest, up to a maximum of 50 alarms; to display the alarm history:

- access the technical parameters as explained in section 8
- select ALARM HISTORY with the **“up”** and **“down”** keys, confirming the selection

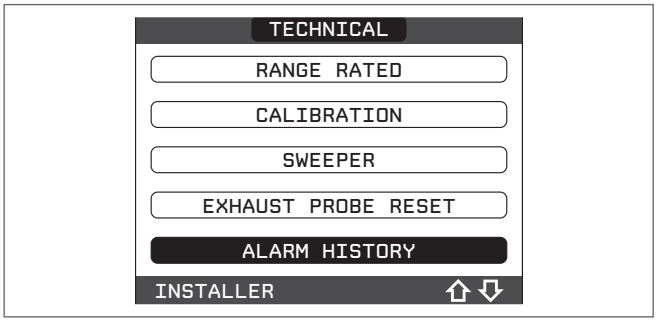

- scroll through the alarm history with the **“up”** and **“down”** keys; for each alarms a sequential number is displayed, an error code and the date and time the alarm occurred.

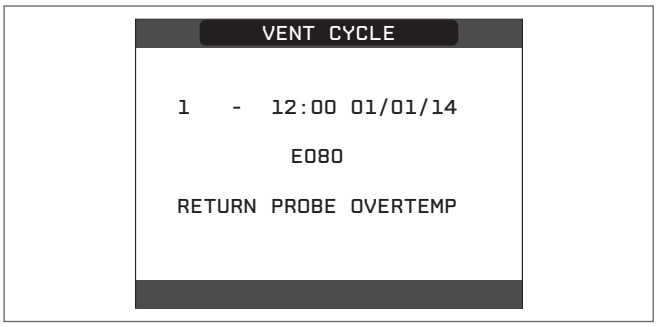

It is possible to return to the start page at any time by keeping the **“back”** key pressed for at least 2 seconds.

Note: once enabled, the ALARM HISTORY function can no longer be disabled; there is no procedure for resetting the alarm history.

If an alarm repeats consecutively, it is saved only once.

6.14 TEMPORARY SWITCH-OFF

In the event of temporary absences (weekends, short breaks, etc.) set the status of the boiler to OFF ⏻.

Refer to section 3.3 for further details.

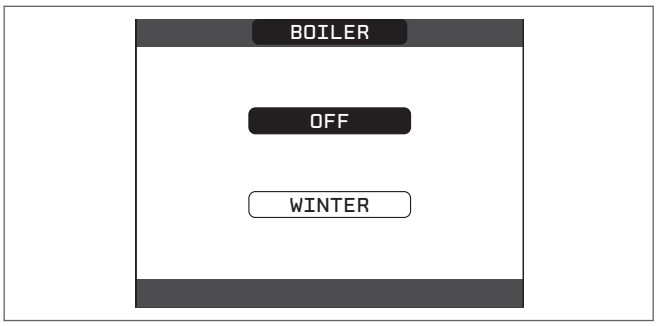

6.15 SWITCHING OFF FOR LENGTHY PERIODS

Refer to section 3.4 for detailed advice on shutting down the appliance for an extended period of time.

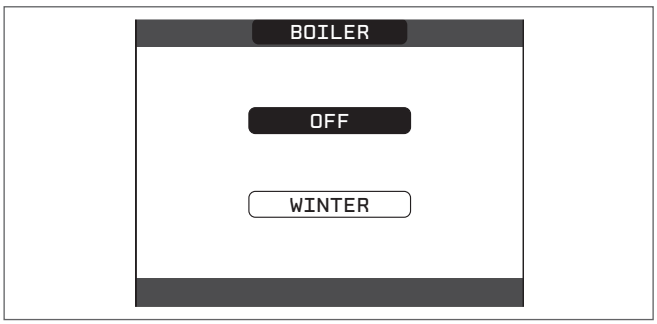

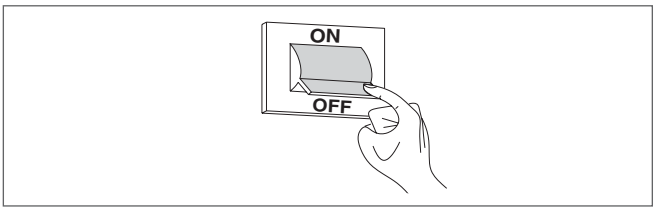

6.16 COMBUSTION PARAMETERS

Although the parameters referring to the combustion control system ACC (Active Combustion Control) are preset in the factory, the simultaneous replacement of both electronics boards (AKM and REC 10 MASTER) will require the re-programming of these parameters.

- Access the technical parameters as explained in the section 8
- Select COMBUSTION MONITORING with the **“up”** and **“down”** keys, confirming the selection

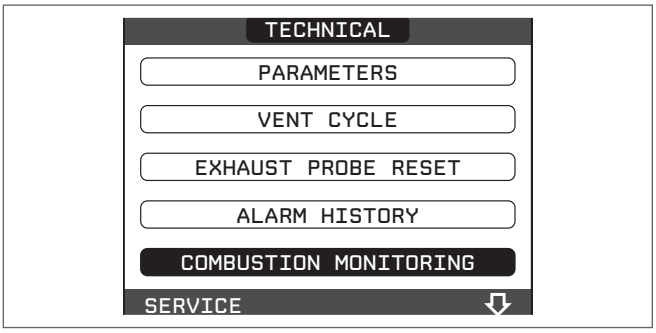

- Select GAS TYPE
- Set this parameter depending on the type of gas of the boiler. The values for this parameter are NG = NATURAL GAS - LPG = LPG

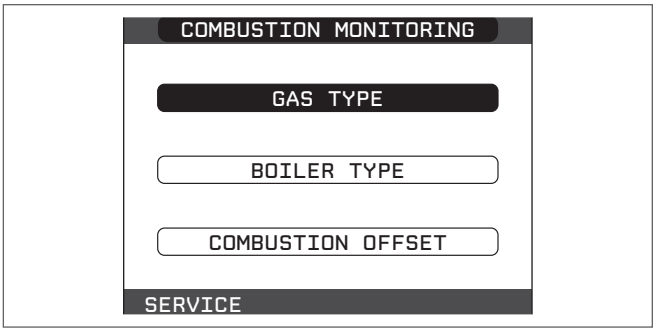

- Select BOILER TYPE
- Set this parameter depending on the type of boiler as shown in the table

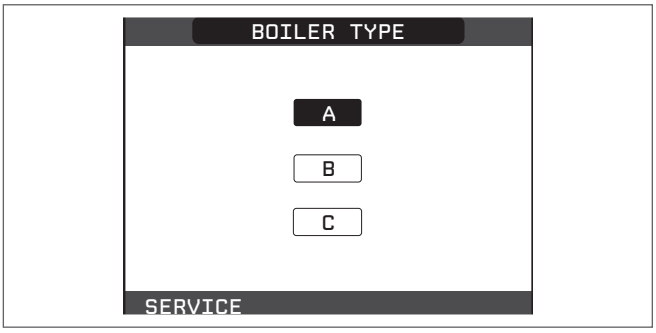

	BOILER TYPE
evolve 18S	A
evolve 24S	B
evolve 30S	D
evolve 35S	E

- Select COMBUSTION OFFSET
- Select RESTORE
- Press OK to confirm.

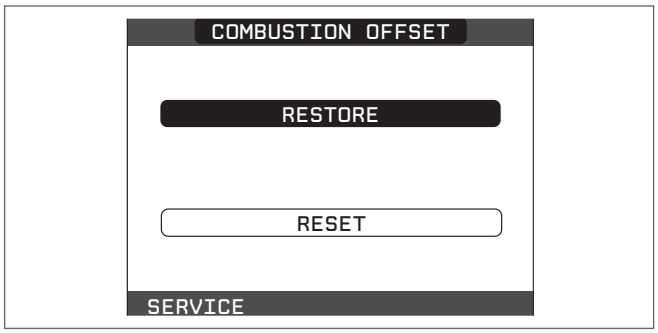

6.17 MAINTENANCE

⚠ In case where, after the replacement of the electronic board or the maintenance of the detection electrode or the burner, the combustion analysis would restore out of tolerance values, it may be necessary to take action on the parameter COMBUSTION OFFSET as described in the section *"6.16 Combustion parameters"*.

Note: in case of replacement of the electrode, slight variations of the combustion parameters can not be excluded. These data wil return to nominal values after a few hours of operation.

⚠ Do not clean the appliance or its parts with inflammable substances (e.g. petrol, alcohol, etc.).

⚠ Do not clean panels, painted parts and plastic parts with paint thinner.

⚠ Panel cleaning must be carried out only with soapy water.

Maintenance of the combustion control system

Maintenance electrode

The detection electrode/ionization sensor has an important function in the boiler ignition phase and in the maintenance of a proper combustion; in this context, in case of replacement, it is necessary to **always ensure** that it is correctly positioned and to strictly observe the reference shown in the figure.

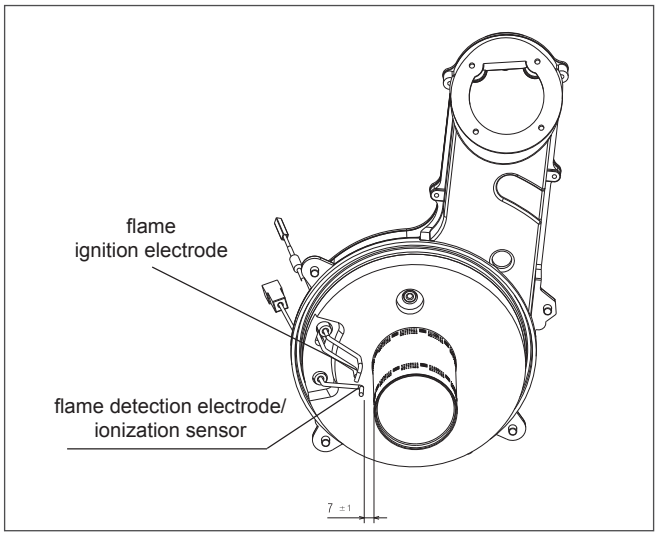

⛔ Do not clean the electrode with sandpaper or any other abrasive material.

⚠ The 'Iono' electrode will degrade over a over a period of time and continued usage; it is therefore strongly recommended that it be replaced after 5-years of use; in order to ensure continued performance and efficiency, and avoid appliance malfunction.

6.18 FINAL CHECKS

- ENSURE THE APPLIANCE FLUE SYSTEM IS FITTED CORRECTLY AND IS PROPERLY SECURED.
- ENSURE ALL PIPE WORK IS RE-CHECKED FOR TIGHTNESS.
- COMPLETE BENCHMARK CHECKLIST.

FOR UK ONLY

Complete details of the boiler, controls, installation and commissioning in the Benchmark checklist at the back of this book. It is important that the Benchmark checklist is correctly completed and handed to the user. Failure to install and commission the appliance to the manufacturers instructions will invalidate the warranty.

6.19 INSTRUCTING THE USER

Hand over all documentation supplied with this appliance – including these instructions – and explain the importance of keeping them in a safe place.

Explain to the user how to isolate the appliance from the gas, water and electricity supplies and the locations of all drain points. Show the user how to operate the appliance and any associated controls correctly.

Show the user the location of the filling valve and how to top-up the system pressure correctly and show the location of all manual air release points.

Explain to the user how to turn off the appliance for both long and short periods and advise on the necessary precautions to prevent frost damage.

Explain to the user that for continued safe and efficient operation, the appliance must be serviced annually by a competent person.

IMPORTANT

To validate the appliance warranty, it's necessary to register the appliance details with us. The warranty can be registered in several ways:

- online at: vokera.co.uk
- for UK residents by calling: 0800 479 0751
- for ROI residents by calling: 056 7755055.

SECTION 7 - SERVICING INSTRUCTIONS

7.1 GENERAL

Once the appliance has been serviced, the benchmark Service Record must be completed.

For UK only
It is important that the Benchmark Service Record is correctly completed and handed to the user. Failure to install and commission the appliance to the manufacturers instructions will invalidate the warranty.

To ensure the continued safe and efficient operation of the appliance, it is recommended that it is checked and serviced at regular intervals. To ensure correct and safe operation of the appliance, it is essential that any worn or failed component be replaced only with a **genuine Vokèra spare part**. It should be remembered that although certain generic components may look similar, they will be specific to an individual appliance or product range. Use of non-genuine Vokèra spare parts could invalidate your warranty and may pose a potential safety hazard. The frequency of servicing will depend upon the particular installation conditions, but in general, once per year should be sufficient. It is the law that any servicing work is carried out by competent person such as a Vokèra engineer, an approved service agent, British Gas, GAS SAFE registered personnel or other suitably qualified personnel. The following instructions apply to the appliance and its controls, but it should be remembered that the central heating and the domestic hot water systems would also require attention from time to time.

7.2 ROUTINE ANNUAL MAINTENANCE

The appliance incorporates many 'state-of-the-art' components that are either 'solid-state' or are regarded as 'non-serviceable' items. As a consequence, the requirements for routine annual maintenance are focussed upon:

1. ensuring that the appliance and flue system are in a safe condition
2. ensuring that the appliance is operating safely
3. ensuring that the appliance is performing to its design specification.

When the appliance has been installed to within the minimum stated clearances; the appliance layout is such that it enables routine annual maintenance to be carried out entirely from the front of the appliance.

NOTE
Any noticeable defect or deterioration on or within the appliance and flue system that impacts or affects the above requirements; will warrant further diagnosis and repair, which may result in the replacement of components.

Specific advice and instruction on the removal and replacement of component parts of the appliance can be found in the following pages of this section.

7.2.1 ROUTINE ANNUAL MAINTENANCE REQUIREMENTS

1. Check the operation of the appliance and ensure the performance is in line with the appliance specification.
2. Using the UI menu, navigate to the alarms history and check for any recent alarm events (menu string is: MENU>SETTINGS>TECHNICAL>ALARM HISTORY). Refer to the alarm/fault codes description chart for further information.
3. Remove the front cover (see 5.7.1) and visually inspect the internal components and electrical wiring for any defect or deterioration.
4. Visually check for any dirt or debris within the condensate trap (the trap is translucent and can be checked visually).
5. Replace the front cover as detailed in 5.7.1 taking notice of the importance of ensuring that the effectiveness of the – front cover – seals are not compromised.
6. Carry out a combustion analysis as detailed in 6.10.
7. Visually check the entire flue system for any damage, defect, or deterioration.

NOTE
In order to access the 'alarms history' it is necessary to access the password protected settings. Refer to section 8 for further details.

7.2.2 UNSCHEDULED MAINTENANCE

The appliance incorporates software that monitors the operating conditions of the appliance, and will record any 'unusual usage conditions' that will affect the requirement to remove and clean the burner/heat exchanger assembly. When the 'unusual usage' hours reach a pre-determined threshold, the appliance will signal – via alarm code E091 – that the heat exchanger requires to be cleaned.

7.3 REPLACEMENT OF COMPONENTS

Although it is anticipated that this appliance will provide years of trouble-free service and outstanding performance; the lifespan of any component will be determined by factors such as operating conditions and usage levels. Should the appliance develop a fault, the fault-finding section of this manual will greatly assist in determining the cause; however further advice can be sought from the Vokera Technical Help-line. Remember always to use only genuine Vokera spare parts.

7.4 COMPONENT REMOVAL PROCEDURE

To remove/replace a component, access to the interior of the appliance is usually essential.
Always isolate the appliance from the electrical supply – and if necessary remove the fuse.

- Close all service valves if any hydraulic and/or gas carrying item is to be removed.
- Remove the front cover – and where necessary or convenient – the side panels of the appliance as detailed in 5.7.1.
- If required, drain the primary circuit via the drain valve (located adjacent to the diverter valve) using the tubing supplied with the appliancee.

NOTE
When removing a hydraulic component, ensure that some water absorbent cloths are available to catch any residual water that may drip from the appliance and/or the removed component.

When the appliance has been installed to within the stated minimum clearances; it may be necessary to remove adjacent components in order to facilitate access to a specific component.

Carry out the relevant elements of the commissioning procedure (section 6.3) after replacing a component.

ALWAYS TEST FOR GAS TIGHTNESS IF ANY GAS CARRYING COMPONENT HAS BEEN DISTURBED, REMOVED, OR REPLACED.

WHEN REPLACING THE SIDE PANELS AND/OR THE FRONT COVER, ENSURE THE ROOM SEALED INTEGRITY OF THE APPLIANCE HAS NOT BEEN COMPROMISED – REFER TO 5.7.1.

7.4.1 APPLIANCE PCB

Carry out the component removal procedure as outlined in 7.4. Remove the appliance PCB cover as detailed in 5.7.3.

TO REMOVE AND REPLACE THE APPLIANCE PCB
Remove the 4-screws – located at each corner of the PCB – that secure the PCB to the rear of the control panel. Remove the screws and store them safely. Take note of the corresponding locations where each of the wiring plugs and terminals are connected to on the PCB, and then carefully remove each plug/terminal. Replace the PCB in the reverse order and refit the securing screws and PCB cover. Refit the front cover as detailed in 5.7.1.

NOTE
If a new PCB has been installed, the appliance configuration will need to be uploaded onto the new PCB from the REC10 UI. Therefore at start-up, the UI screen will request selection of the configuration type:

- from AKM
- from REC10.

Use the up/down buttons to highlight 'REC10' and press select (for detailed advice on this, refer to section 7.4.23).

7.4.2 REC10 USER INTERFACE (UI)

Carry out the component removal procedure as outlined in 7.4.
Remove the appliance PCB cover as detailed in 5.7.3.

TO REMOVE AND REPLACE THE REC10

Locate and remove the 2-screws that secure the REC10 to its aperture. From the front of the control panel, gently lever out the REC10 from its sealing aperture; and once removed, disconnect the wiring plug from the REC10. Replace the REC10 in the reverse order and refit the securing screws and PCB cover. Refit the front cover as detailed in 5.7.1.

NOTE

If a new REC10 has been installed, the appliance configuration will need to be uploaded onto the new REC10 from the appliance PCB. Therefore at start-up, the UI screen on the REC10 will request selection of the configuration type:

- from AKM
- from REC10.

Use the up/down buttons to highlight 'AKM' and press select (for detailed advice on this, refer to section 7.4.22).

NOTE

If both REC10 and appliance PCB are replaced simultaneously, refer to the detailed guidance provided in section 8.8 and 6.16, on how to set up a new appliance configuration.

7.4.3 ELECTRODE ASSEMBLIES

Carry out the component removal procedure as outlined in 7.4.
Remove the front cover as detailed in 5.7.1.
Disconnect the electrode from its wiring connector.
Each electrode assembly is retained by two securing screws (**A**); remove both securing screws from the relevant electrode assembly and carefully withdraw the electrode from its location – taking extreme care not to damage or bend the electrode in the process.
Replace in the reverse order.

NOTE

Any damage or deterioration to the electrode seal will require it to be replaced with a new seal.

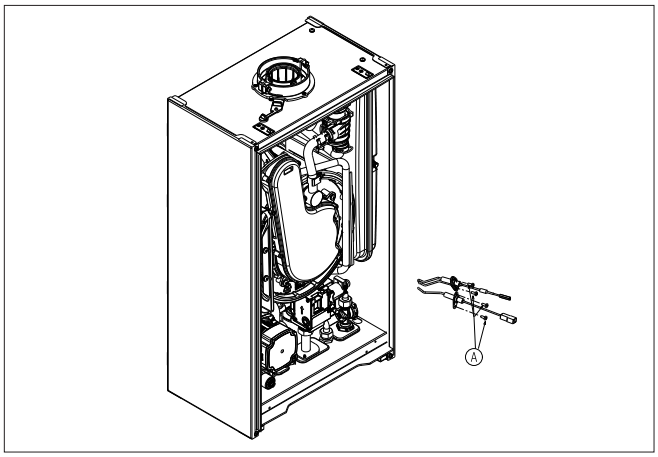

7.4.4 AIR/GAS CONVEYOR COVER

Carry out the component removal procedure as outlined in 7.4.
Remove the front cover as detailed in 5.7.1.
Remove securing screws (**A**).
Replace in the reverse order.

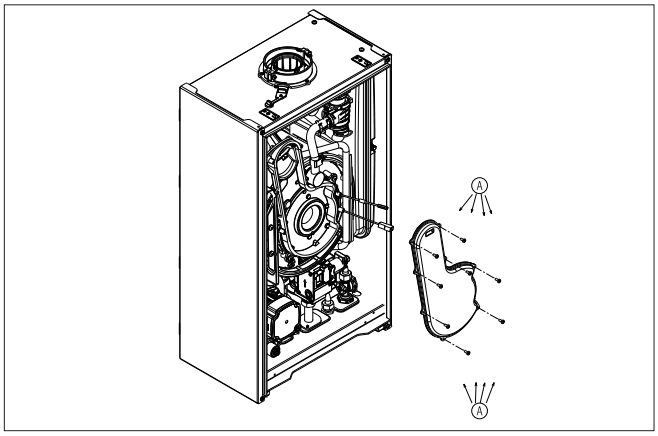

NOTE

Any damage or deterioration to the seal will require it to be replaced with a new seal.

7.4.5 BURNER

Carry out the component removal procedure as outlined in 7.4.
Remove the front cover as detailed in 5.7.1.
Remove air/gas conveyor cover as detailed in 7.4.4.
Locate and remove cylindrical burner (**A**).
Replace in the reverse order ensuring that the seal (**B**) is correctly located, and that the burner (**A**) is also correctly located (both the seal and the burner incorporate a 'notch' that must be in alignment with the corresponding tab of the burner aperture).
Refit air/gas conveyor cover as detailed in 7.4.4.

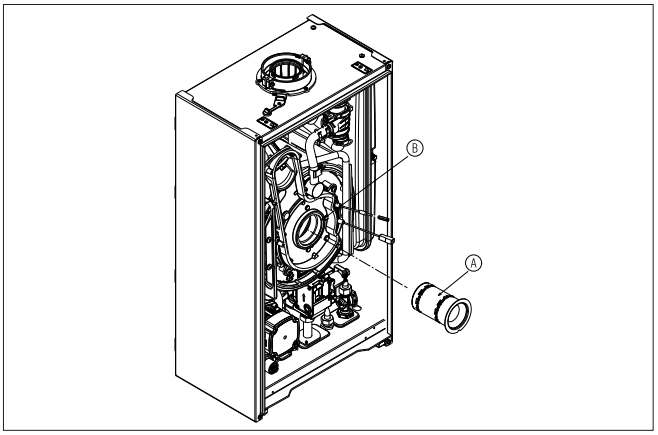

7.4.6 FAN & MIXER ASSEMBLY

Carry out the component removal procedure as outlined in 7.4.
Remove the front cover as detailed in 5.7.1.
Disconnect wiring from fan.
Disconnect electrode leads.
Disconnect outlet gas pipe (**F**) from the gas valve loosen nut (**G**), and remove locking pin (**E**) that secures the pipe to the fan mixer.
Loosen the 4 screws (**H**). The entire fan mixer assembly can now be removed. Replace in the reverse order ensuring any worn or damaged seals are replaced with new ones.

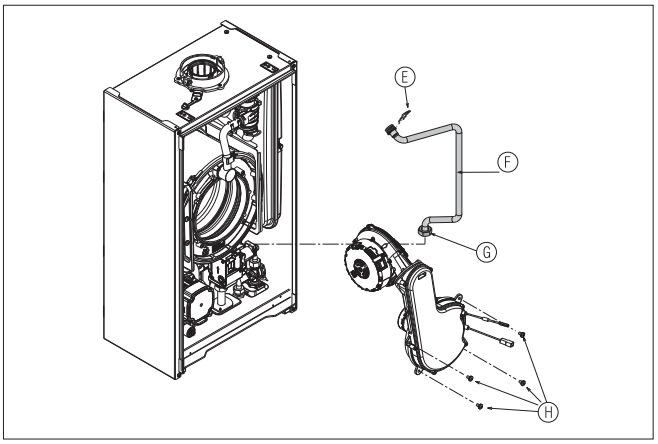

7.4.7 FAN REMOVAL

Carry out the component removal procedure as outlined in 7.4.
Remove the front cover as detailed in 5.7.1.
Remove the fan and mixer assembly as detailed in 7.4.6.
Remove the 4-hex screws (**A**) that secure the fan to the air/gas mixer assembly. Replace in the reverse order ensuring any worn or damaged seals are replaced with new ones.

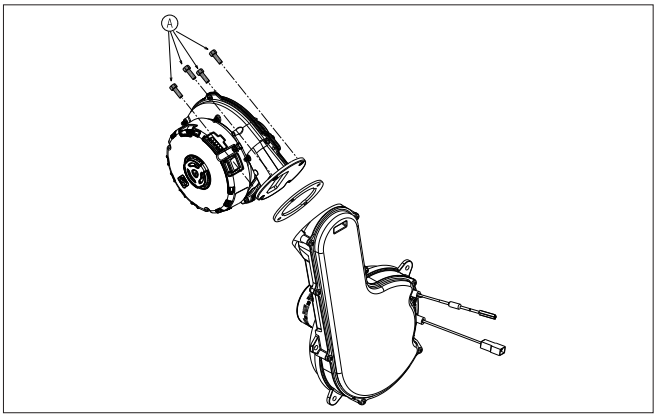

7.4.8 PRIMARY HEAT EXCHANGER

Carry out the component removal procedure as outlined in 7.4.
Remove the front cover as detailed in 5.7.1.
Disconnect wiring to fan.
Detatch the wiring from the clip on the left rear side of the exchanger.
Disconnect electrode leads.
Loosen the 2 screws (**C**) and disconnect and/or remove flow pipe (**D**) from cyclonic separator as detailed in 7.4.6.
Disconnect return pipe (**A**) from pump outlet.
Disconnect and remove outlet gas pipe (**F**) as detailed in 7.4.6.
Disconnect condensate pipe (**B**) from the bottom of the exchanger (**C**).
Locate and remove the 4-securing screws (**D**) that secure the exchanger to the appliance back frame.
Gently withdraw the entire fan/mixer & heat exchanger assembly from the appliance.
Carefully replace the assembly in the reverse order paying attention to aligning the rear outlet of the exchanger with the corresponding inlet of the flue gas conveyor and ensuring no pipes or wiring is trapped between the exchanger and the appliance back frame.
Replace any worn or damaged seals where necessary.

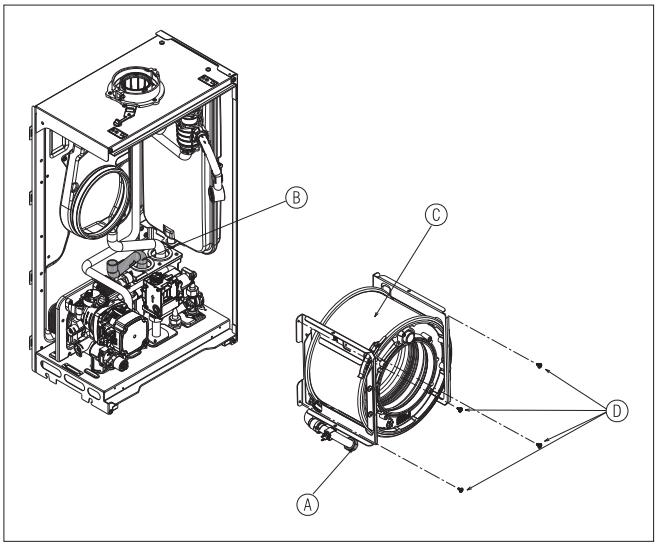

7.4.9 FLUE GAS CONVEYOR

Carry out the component removal procedure as outlined in 7.4.
Remove the front cover as detailed in 5.7.1.
Remove the fan/mixer & heat exchanger assembly as detailed in 7.4.8.
Disconnect tubing from the top AAV at the conveyor.
Disconnect the condensate tubing (**A**) from the bottom of the conveyor (**D**).
Locate and remove the 3-securing screws (**C**) and withdraw the conveyor.
Replace in the reverse order ensuring any worn or damaged seals are replaced with new ones.

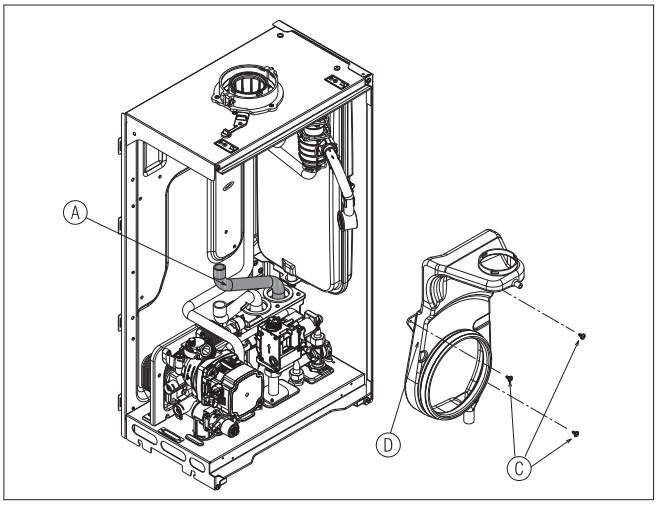

7.4.10 IGNITION TRANSFORMER

Carry out the component removal procedure as outlined in 7.4.
Remove the front cover as detailed in 5.7.1.
Disconnect wiring from ignition transformer (**B**).
Locate and remove securing screw (**A**).
Replace in the reverse order.

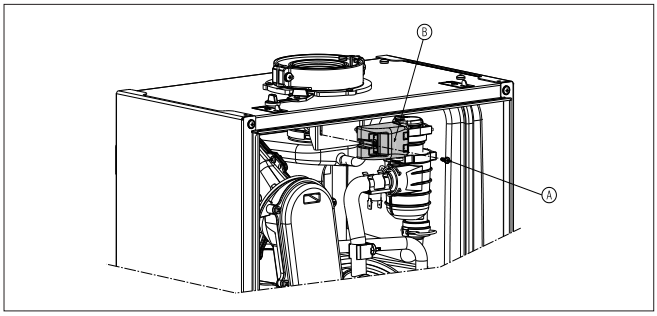

7.4.11 EXPANSION VESSEL

Carry out the component removal procedure as outlined in 7.4, paying special attention to the possibility of some residual water still remaining within the vessel (with the appliance drain still open, it is possible to displace most of the residual water in the vessel by attaching a pump to the valve on the vessel and pump it out via the drain).
Remove the front cover as detailed in 5.7.1.
Disconnect the flexible expansion pipe (**D**) from the bottom of the expansion vessel (**H**).
Locate and remove the top rear securing screw (**C**).
Locate and remove the front securing screw (**C**).
The vessel can now be lifted out of its lower retaining bracket.
Replace in the reverse order, ensuring that the vessel's charge pressure is correct and that any worn or damaged seals are replaced with new ones.

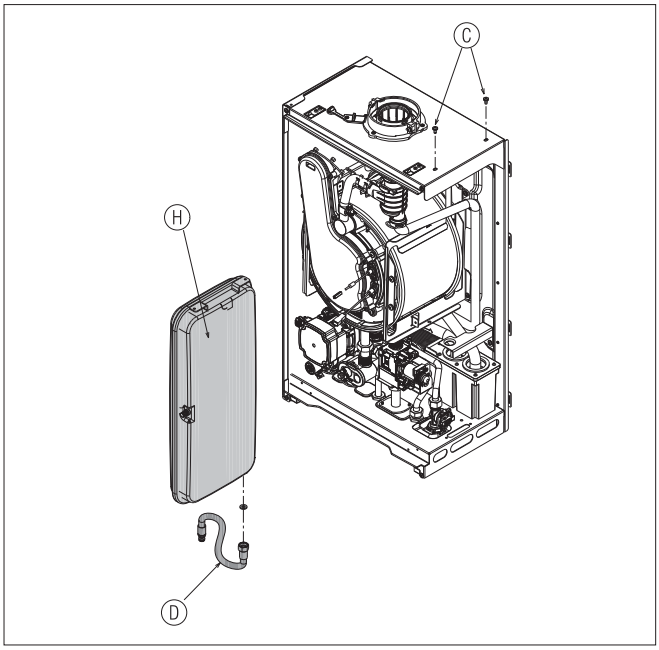

7.4.12 CONDENSATE TRAP

Carry out the component removal procedure as outlined in 7.4.
Remove the front cover as detailed in 5.7.1.
The condensate trap can be removed from the right hand side if/when there is a minimum of 50mm clearance to the side of the appliance. This method of removal is significantly quicker. The following method of removal assumes that there is insufficient clearance to the right-side of the appliance.

NOTE

Ensure that the appliance/components are protected from any residual water that may still remain within the expansion vessel.
Disconnect the gas valve as detailed in 7.4.18. (**NOTE:** it is not necessary to remove the electrical wiring to the gas valve), and move it to the side.
Disconnect the flexible pipe from the bottom of the expansion vessel.

Disconnect the three rubber tubes (**A**) that are connected to the condensate trap.
Disconnect pipe (**C**) that is connected to the condensate outlet (located beneath the appliance).
Remove the locking pin (**B**) at the condensate outlet that secures the condensate trap to the lower frame of the appliance.
The condensate trap can now be lifted and removed from its location.
Replace in the reverse order, ensuring any worn or damaged seals are replaced with new ones.

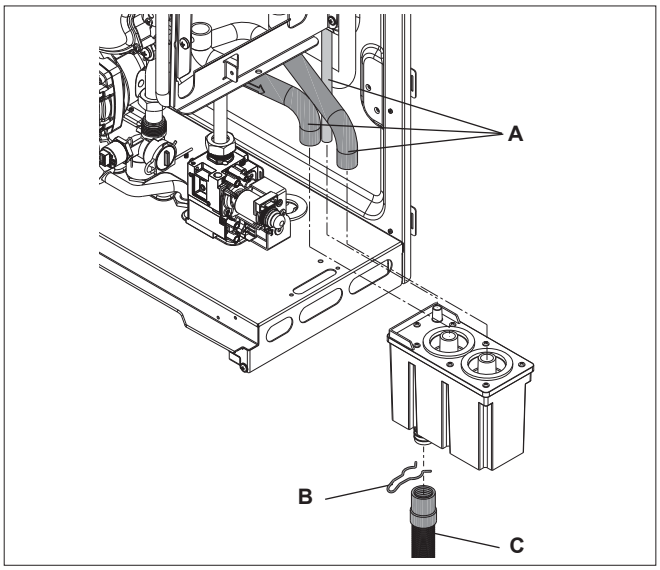

7.4.13.1 PUMP HEAD

Carry out the component removal procedure as outlined in 7.4.
Remove the front cover as detailed in 5.7.1.
Disconnect both electrical plugs on the pump head.
Unscrew the 4 retaining screws (**A**) that secure the pump head to the pump body (use a 4mm allen key or t-bar) and remove the pump head.
Replace in the reverse order.

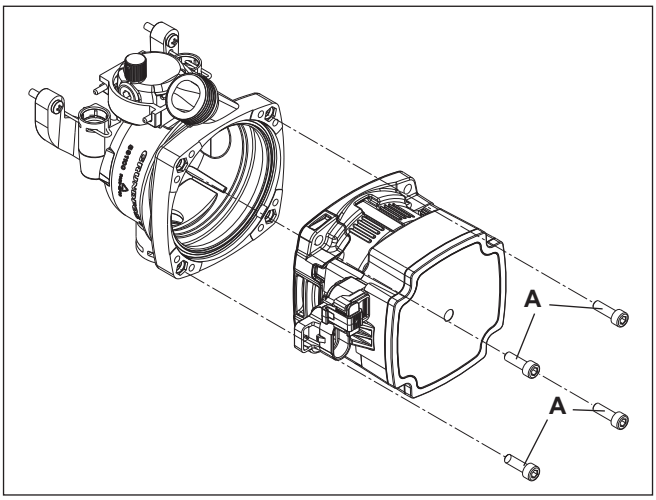

7.4.13.2 LOWER AAV

Carry out the component removal procedure as outlined in 7.4.
Remove the front cover as detailed in 5.7.1.
Locate and remove the locking pin (**B**) that secures the flexible expansion pipe to the pump body; then remove the pipe from its aperture.
Locate and pull out locking pin (**G**) until it touches the edge of the safety valve pipe.
Apply firm pressure around the AAV (**H**) in order to free it from its aperture within the pump body.
Replace in the reverse order ensuring that the AAV is orientated as shown in the diagram; and ensure that the AAV is fully inserted and clicks into it's aperture. **NOTE:** the locking pin for the flexible expansion pipe can only be inserted one way, with the straight leg to the right.
Replace any worn or damaged seals with new ones.

7.4.13.3 PUMP ASSEMBLY

Disconnect the return pipe from the pump outlet.
Disconnect the electrical plugs from the pump head.
Extract the locking pin (**E**) from the base of the pump body (**F**).
Remove locking pin (**B**) from the top right of the pump body.
Locate and remove securing screws (**D**).
Gently lift the pump assembly upwards then outwards, then remove locking pin (**C**) from the top left of the pump body, before removing the assembly from the appliance.
Replace in the reverse order.
Replace any worn or damaged seals with new ones.

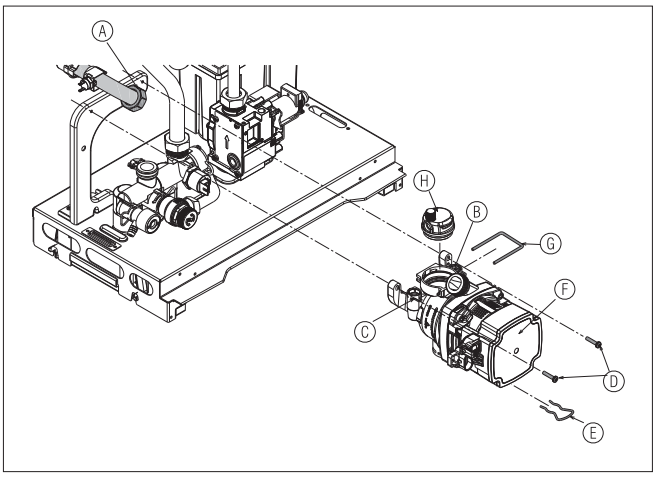

7.4.14 BYPASS/NON RETURN VALVE

Carry out the component removal procedure as outlined in 7.4.
Remove the front cover as detailed in 5.7.1.
Remove locking pin (1) as shown in the diagram.
Disconnect and remove in sequence: plug (2), ring (3), by-pass valve support (4) and the by-pass cartridge (5).
Ensure all seals are in good condition, taking care to ensure they are replaced correctly.
Replace in the reverse order ensuring the cartridge is facing the correct way.

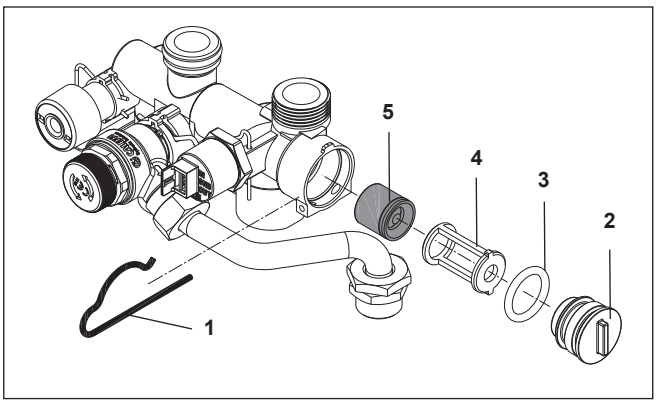

7.4.15.1 DEGASSING UNIT

Carry out the component removal procedure as outlined in 7.4.
Remove the front cover as detailed in 5.7.1.
Detach the rubber tube (**A**) that connects to the AAV (**E**).
Locate and remove the locking pin (**C**).
Using firm steady pressure, extract the AAV from its aperture
Replace in the reverse order.

NOTE: The AAV must be inserted as shown in the diagram. The rubber O'ring seal should be placed over the AAV and smeared with some silicone grease. The AAV should 'click' when correctly inserted into its aperture.

7.4.15.2 CYCLONIC SEPERATOR

Carry out the component removal procedure as outlined in 7.4.
Remove the front cover as detailed in 5.7.1.
Remove both locking pins that secure the inlet and outlet pipes to the separator (**D**).
Slacken - but do not remove - both screws that secure the outlet pipe on the main heat exchanger (allowing the pipe to rotate freely).
Gently prize apart the inlet/outlet pipes from the separator until it is free.

Detach the rubber tube (**A**) that connects to the AAV.
Replace in the reverse order ensuring that any worn or damaged seals are replaced with new ones.

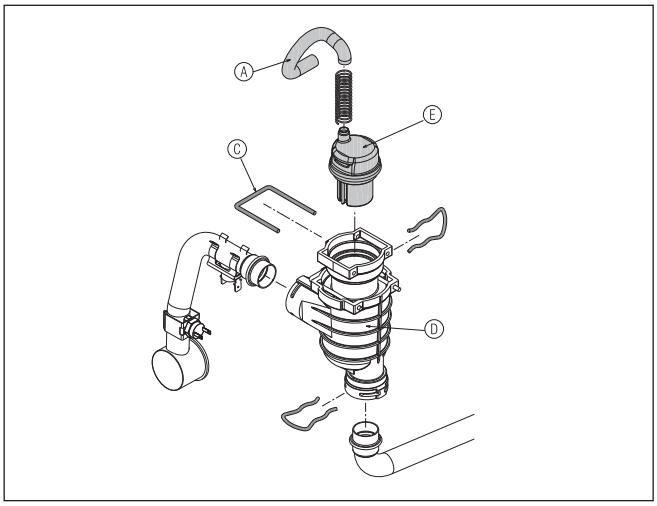

7.4.16 PRESSURE TRANSDUCER

Carry out the component removal procedure as outlined in 7.4.
Remove the front cover as detailed in 5.7.1.
Locate and remove locking pin (**A**).
Remove transducer (**B**).
Disconnect plug from transducer.
Replace in the reverse order.

7.4.17 SAFETY VALVE

Carry out the component removal procedure as outlined in 7.4.
Remove the front cover as detailed in 5.7.1.
Disconnect safety valve outlet pipe (**C**) from the safety valve.
Locate and remove locking pin (**D**) and then extract safety valve (**E**) from its aperture.
Replace in the reverse order.

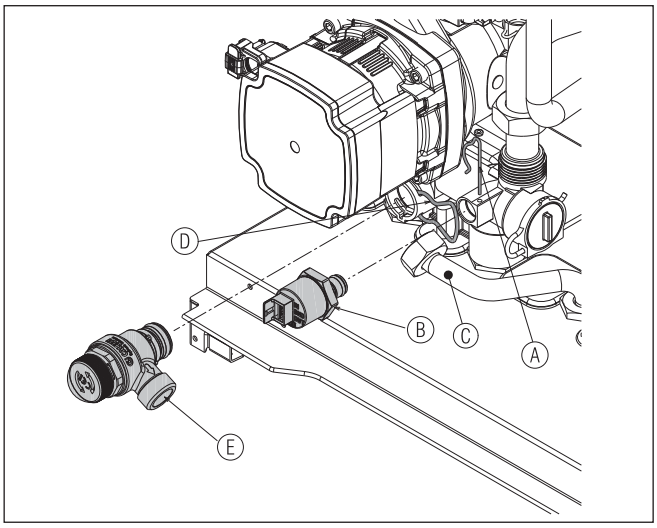

7.4.18 GAS VALVE

Carry out the component removal procedure as outlined in 7.4.
Remove the front cover as detailed in 5.7.1.
Slacken off nut (**A**) and unscrew the 2 screws (**B**).
Swivel the gas valve (**C**) round and disconnect the electrical connections.
Remove the nozzle (**D**) for use with a replacement valve if the gas valve is to be replaced.
Replace in the reverse order.

NOTE: the gas valve is a non-serviceable item - DO NOT - attempt to alter or adjust any of its mechanical settings. Both sealing washers must be replaced.

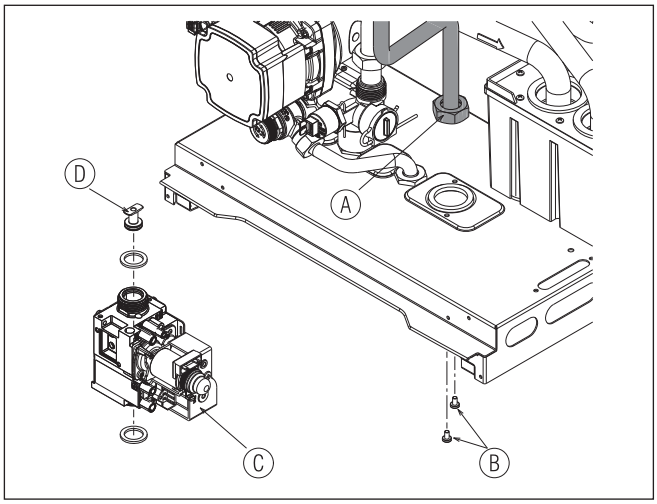

7.4.19 DRY CONTACT SENSORS (FLOW, RETURN, HI-LIMIT)

Carry out the component removal procedure as outlined in 7.4.
Remove the front cover as detailed in 5.7.1.
Identify the sensor to be replaced.
Remove the pipe clip that incorporates the sensor from its location.
Disconnect both wires from the sensor.
Remove the sensor from the pipe clip.
Replace in the reverse order - ensuring that the sensor is correctly positioned and that some heat conduction paste has been applied to the face of the sensor.

7.4.20 ANALOGUE PRESSURE GAUGE

Carry out the component removal procedure as outlined in 7.4.
Remove the front cover as detailed in 5.7.1.
Locate and remove the locking pin that secure the pressure gauge to the pump assembly (rear left side).
Ease the connection from its aperture.
Locate and remove the 2-screws that secure the gauge to the underside of the appliance.
The gauge incorporates a ‘bayonet’ type connection; rotate the gauge 90-degree in order to remove it from its aperture, ensuring that the gauge tubing does not get jammed or caught internally.
Replace in the reverse order ensuring that any worn or damaged seal is replaced with a new one.

7.4.21 FLUE SENSOR

Carry out the component removal procedure as outlined in 7.4.
Remove the front cover as detailed in 5.7.1.
If required, remove the fan/mixer assembly as detailed in 7.4.6.
Disconnect the electrical plug from the sensor.
Unscrew the sensor from the sensor pocket.
Replace in the reverse order, ensuring any worn or damaged seals are replaced with new ones.

7.4.22 REPLACING THE REC10 MASTER

⚠ The system’s configuration operations need to be carried out by professionally qualified personnel of the Technical Assistance Centre.

When replacing the REC10 MASTER, at the subsequent restart it displays an initial screen with the firmware revision.
Pressing **“ok”** starts a guided procedure for configuring the system, see section *“8.8 REC10 System reset”*. Follow the procedure and carry out the FROM AKM type of configuration.

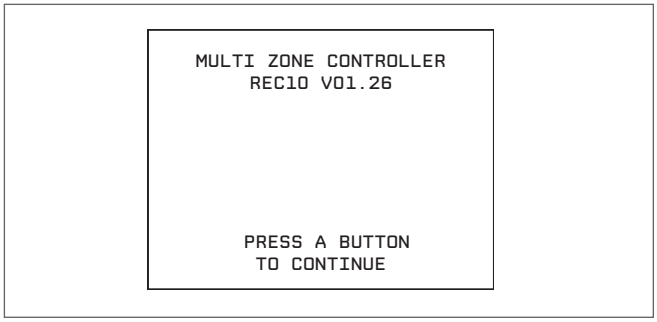

7.4.23 REPLACING THE AKM01 BOARD

The configuration operations should be carried out by professionally qualified personnel of the Technical Assistance Centre.
The systems continually carries out a consistency control between the saved configuration data on the AKM01 electronic board and those saved in the REC10; therefore, when replacing the AKM01 electronic board, it can happen that the system detects an inconsistency between the data saved on the AKM01 and that in the REC10.
In this case, the latter will ask the user which of the two configurations is to be considered valid; selecting to recuperate the configuration from the REC itself it is possible to avoid reconfiguring the machine:

- select REC10 with the **“up”** and **“down”** keys, confirming the selection.

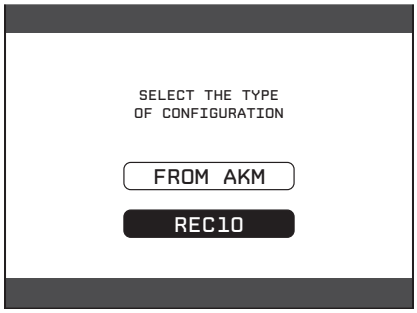

7.4.24 GUIDANCE ON THE REMOVAL & REPLACEMENT OF COMPONENTS

The following table provide guidance on the removal and replacement of components from the appliance with regards to the average ‘R&R’ (Removal & Replacement) time, and the required skill level. This guidance is based on the assumption that the removal of components will be undertaken using ‘FRONT’ access only.

7.4.25 GUIDANCE ON THE REMOVAL & REPLACEMENT OF COMPONENTS

The following table provide guidance on the removal and replacement of components from the appliance with regards to the average 'R&R' (Removal & Replacement) time, and the required skill level. This guidance is based on the assumption that the removal of components will be undertaken using 'FRONT' access only.

TASK	TIME (minutes)	SKILL LEVEL
Burner	5	
Fan/mixer assembly	6	
Fan	9	
Top electrode	3	
Lower electrode	2	
Gas valve	3	
Return NTC sensor	3	
Flow NTC sensor	2	
High limit thermostat	2	
Ignition transformer	2	
Pump head	4	
Complete pump assembly	8	
Pressure transducer	2	
Safety valve	3	
Analogue pressure gauge	6	
Non-return valve	3	
Automatic bypass	3	
Expansion vessel	4	
Flue sensor	10	
Top automatic air vent	4	
Lower automatic air vent	3	
Condensate trap	7	
Cyclonic separator	5	
Primary heat exchanger	12	
Exhaust flue gas conveyor	12	
Appliance PCB	4	
REC10 User Interface	4	
Front cover	1	
Side cover*	1	

***NOTE**

Do not attempt removal of the side cover/s if/when there is less than 25mm clearance to the side of the appliance.

SECTION 8 - CHECKS, ADJUSTMENTS AND FAULT FINDING

8.1 CHECKING APPLIANCE OPERATION

When carrying out any repairs or servicing to the appliance, the relevant commissioning procedure must be undertaken to ensure the continued safe operation of the appliance. Particular attention should be made to ensure gas tightness, water tightness and the electrical integrity of the appliance.

8.2 APPLIANCE MODES OF OPERATION

NOTE

There must be sufficient system water pressure (min. 0.5 bar) to ensure the water pressure switch is activated. If there is insufficient system pressure the pump and fan will be prevented from operating and the low-pressure fault code will be indicated.

8.2.1 OFF

When the appliance has been set to OFF via the REC10 UI, the following functions will remain active:

• frost-protection system
• pump anti-block.

8.2.2 ON-BOARD FUNCTIONS

- **FROST-PROTECTION:** this function is only active when there are no requests for heating or HW. If the temperature drops below 5°C, the boiler will operate on minimum power until the temperature of the thermistors reaches 35°C for CH and 55°C for DHW. Thereafter the pump & fan will over-run for 30-seconds.
- **ANTI-CYCLE FUNCTION:** the anti-cycle function ensures the burner remains switched off for at least 3-minutes after the set-point hysterisis (set-point + 5-deg) for CH heat request.
- **PUMP ANTI-BLOCK FUNCTION:** when there has been no heating or HW request for 24-hours, the anti-block cycle is activated. The pump will be activated for a period of 30-seconds.

8.2.3 HEATING MODE

When a 'heating' request is generated via the connected external control/s and/or the REC10 UI, the appliance will operate in the heating mode. The pump and fan will be activated via the flow temperature sensor. When the fan is sensed to be operating correctly (tacho signal), the ignition sequence commences. Ignition is sensed by the electronic circuit to ensure flame stability at the burner. Once successful ignition has been achieved, the electronic circuitry increases the gas rate to 75% for a period of 15 minutes.

The speed of the fan and therefore the output of the boiler is determined by the temperature of the water sensed by the flow temperature sensor, consequently a high temperature at the flow sensor results in a lower fan speed. As the water temperature increases, the temperature sensors – located on the flow pipe of the boiler – reduce the fan speed via the electronic circuitry. Depending on the load, either the water temperature will continue to rise until the set point is achieved or the water temperature will fall whereby fan speed will increase relative to the output required. When the boiler has reached the set point (+ hysterisis), the burner will switch off. The built-in anti-cycle device prevents the burner from re-lighting for approximately 3-minutes.

When the temperature of the flow sensor falls below the set point (- hysterisis), the burner will re-light.

NOTE

If burner ignition is not detected at the first attempt, the appliance will repeat the ignition sequence another two times (3-times in total) before going to lockout. When the set-point has been reached as measured at the primary thermistor, the appliance will begin the modulation phase whereby the fan and gas valve will continuously modulate to maintain the set-point.

If the temperature continues to rise and exceeds the set-point by 5°C (hysterisis), the burner will shut down. A new ignition sequence will be enabled when the 3- minute anti-cycle has been performed and the temperature at the primary thermistor has dropped 5°C (hysterisis) below the set-point.

NOTE

When the request for heating and/or hot water has been satisfied, the appliance pump and fan may continue to circulate to dissipate any residual heat within the appliance.

ATTENTION

Gas type and appliance outputs are factory set by default, at the values declared in the specification data in section 2.

Vokera cannot accept any responsibility for any damage or malfunction that has been caused as a result of tampering or incorrect set up of this appliance during installation or commissioning.

8.3 CHECKING THE EXPANSION VESSEL

Carry out the component removal procedure as described in 7.4. You must ensure that the boiler is completely drained of water. Using a suitable pressure gauge, remove dust cap on expansion vessel and check the charge pressure. The correct charge pressure should be 1.0 bar ± 0.1 bar. If the charge pressure is less, use a suitable pump to increase the charge.

NOTE

You must ensure the drain valve is in the open position whilst re-charging takes place. Replace the dust cap and carry out the relevant commissioning procedure (section 6).

8.4 EXTERNAL FAULTS

Before carrying out any faultfinding or component replacement, ensure the fault is not attributable to any aspect of the installation.

8.4.1 INSTALLATION FAULTS

Symptom	Possible cause
No ignition	Check wiring/check electrical supply
No Heating and/or HW	Check external controls

Fault	Possible cause
Fault code	Check gas supply, check flue system

8.5 ELECTRICAL CHECKS

Any electrical checks must be carried out by a suitably qualified person.

8.5.1 EARTH CONTINUITY TEST

Isolate the appliance from the electrical supply, and using a suitable multi-meter carry out a resistance test. Connect test leads between an appliance earth point and the earth wire of the appliance supply cable. The resistance should be less than 1 OHM. If the resistance is greater than 1 OHM check all earth wires and connectors for continuity and integrity.

8.5.2 SHORT CIRCUIT CHECK

Isolate the appliance from the electrical supply, and using a suitable multi-meter, carry out a short circuit test between the Live & Neutral connections at the appliance terminal strip. Repeat above test on the Live & Earth connections at the appliance terminal strip.

NOTE

Should it be found that the fuse has failed but no fault is indicated, a detailed continuity check will be required to trace the fault. A visual inspection of components may also assist in locating the fault.

8.5.3 POLARITY CHECK

With the appliance connected to the electrical supply and using a suitable multimeter, carry out the following voltage tests:

- connect test leads between the Live & Neutral connections at the appliance terminal strip. The meter should read approximately 230V ac. If so proceed to next stage. If not, see 8.6.
- connect test leads between the Live & Earth connections at the appliance terminal strip. The meter should read approximately 230V ac. If so proceed to next stage. If not, see 8.6.
- connect test leads between the Neutral & Earth connections at the appliance terminal strip. The meter should read approximately 0 – 15Vac. If so polarity is correct. If not, see 8.6.

8.5.4 REVERSED POLARITY OR SUPPLY FAULT

Repeat the above tests at the appliance isolator, if testing reveals correct polarity and/or supply at the isolator, re-check wiring and connections between the isolator and the appliance. If tests on the isolator also reveal reversed polarity or a supply fault, consult the local electricity supplier for advice.

DISTANCE TO EARTH CHECK

Isolate the appliance from the electrical supply, and using a suitable multi-meter carry out a resistance test. Connect test leads between the Live & Earth connections at the appliance terminal strip. If the meter reads other than infinity there is a fault that must be isolated, carry out a detailed continuity check to identify the location of the fault.

These series of checks must be carried out before attempting any faultfinding procedures on the appliance. On completion of any task that required the disconnection and re-connection of any electrical wiring or component, these checks must be repeated.

8.6 FAULT FINDING

Before attempting any faultfinding, the electrical checks as detailed in 8.5 must be carried out. Isolate the appliance from the electrical supply.

Disconnect any external controls from terminal plug, and insert a link-wire between the two wires at the 'TA' connections of the D-sub interface.

NOTE

Restore the electrical supply to the boiler and RESET functionning. The boiler should now function as described in section 8.2. Should the boiler fail to respond, the internal fuses and connectors should be checked to ensure integrity and continuity.

8.7 APPLIANCE STATUS AND FAULT CODES

When the boiler detects a temporary fault condition, the appropriate code is shown. If/when the fault is final, the pump will perform 30 to 60-second post circulation (depending on the error code) and fault code will be displayed. For combustion fault, FAN can also post vent up to 5min if required.

8.8 REC10 SYSTEM RESET

Warning! – This operation must only be carried out by qualified personnel!

If required, the system configuration can be reset back to the factory default configuration; however care needs to be taken in order to carry out a successful reset:

- access the technical parameter settings as outlined in section 8
- scroll to and select the following menu string:
  MENU>TECHNICAL>INSTALLATION>SYSTEM RESET>CONFIRM

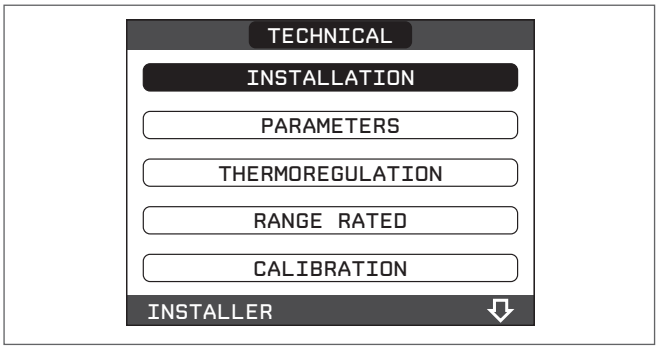

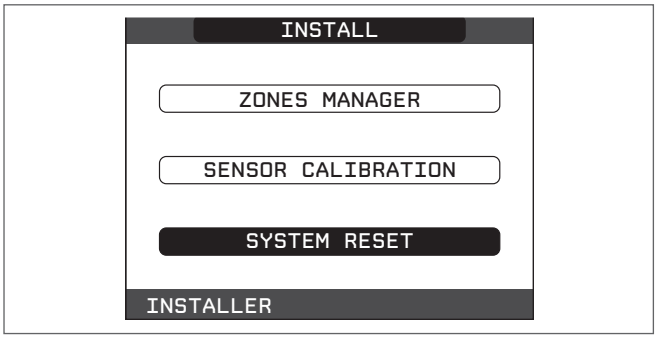

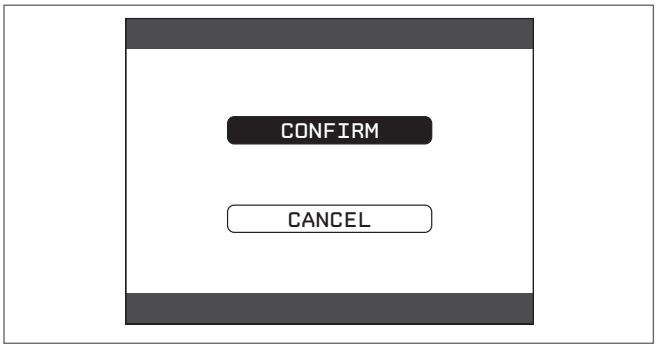

- the UI screen will display the firmware version – press any key to continue
- select language (ENGLISH)
- enter the time and date
- select MASTER
- select configuration type: NEW or FROM AKM (see below)

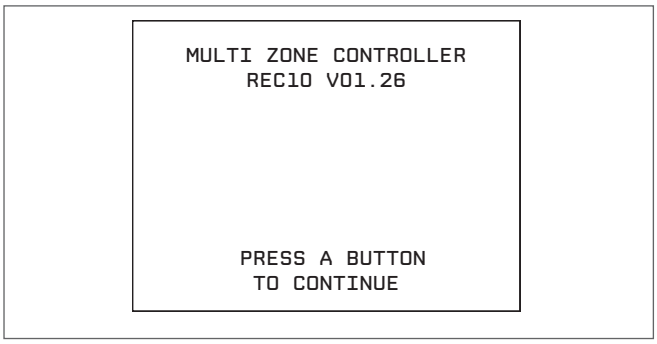

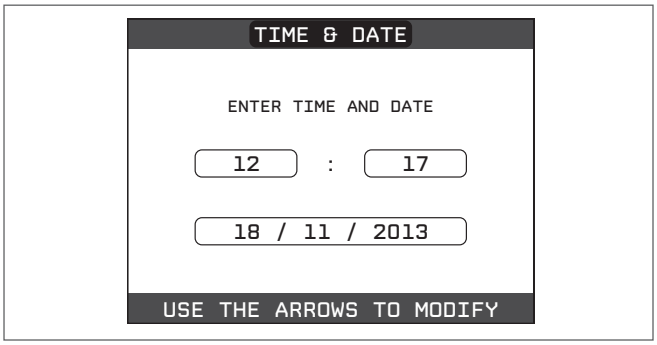

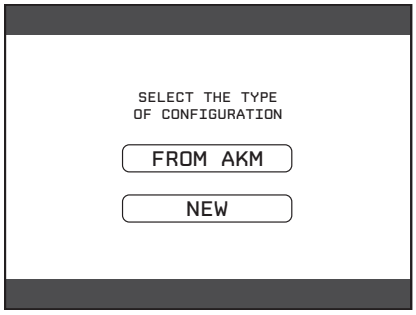

8.8.1 CONFIGURATION FROM AKM PCB

- Select configuration type: **FROM AKM**
- The REC10 will use the information/settings stored on the AKM PCB to configure the appliance

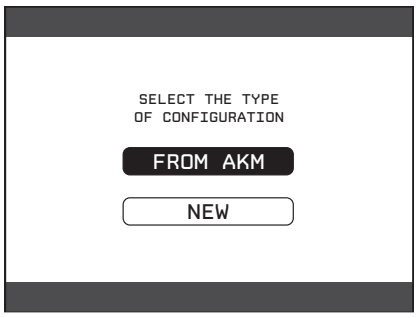

8.8.2 NEW CONFIGURATION

- Select configuration type: **NEW**
- Select location of REC10: **ON BOARD**
- Select PLANT type: **CH ONLY** – **INSTANTANEOUS** – **STORAGE TANK** (see below)

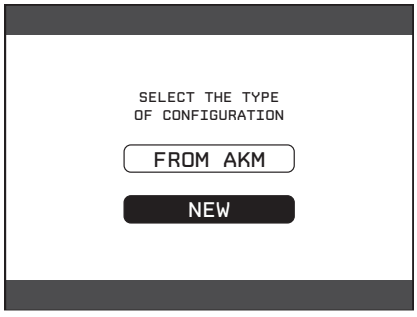

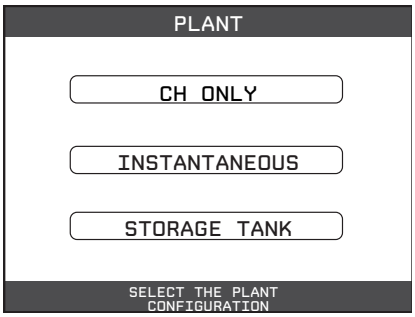

- select **CH ONLY** if the appliance is a 'heat' only system boiler
- select **INSTANTANEOUS** if the appliance is a combination boiler
- then select **FLUX METER** (only selectable with INSTANTANEOUS).

NOTE
After a system reset where the configuration selection is 'new', carry out a check on the various (applicable) installation parameters to ensure that the 'new' configuration meets the requirements of the system.

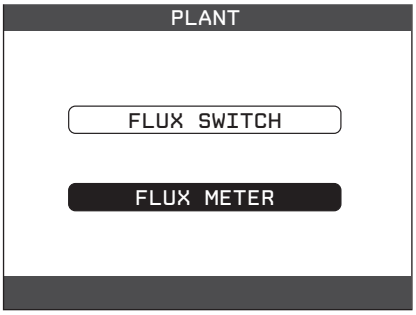

8.9 ACCESS TO INSTALLATION PARAMETERS

Warning! – Unqualified personnel and/or 'end-users' should not attempt to access or adjust ANY installation parameter; serious damage or appliance malfunction may occur as the result of an incorrectly set parameter.

To access the installation parameters:

1. select MENU from the REC10 UI
2. simultaneously press and hold both the 'return' and 'down-arrow' buttons until the display changes to show: INSERT PASSWORD
3. using the 'up-arrow' button, press until '18' is shown in the display, then press 'select'
4. use the following menu string: **MENU>TECHNICAL**
5. refer to the menu hierarchy tree on page 19 for further details.

8.10 TYPICAL BESMART CONNECTION – CONNECTED TO THE 'D-SUB' INTERFACE

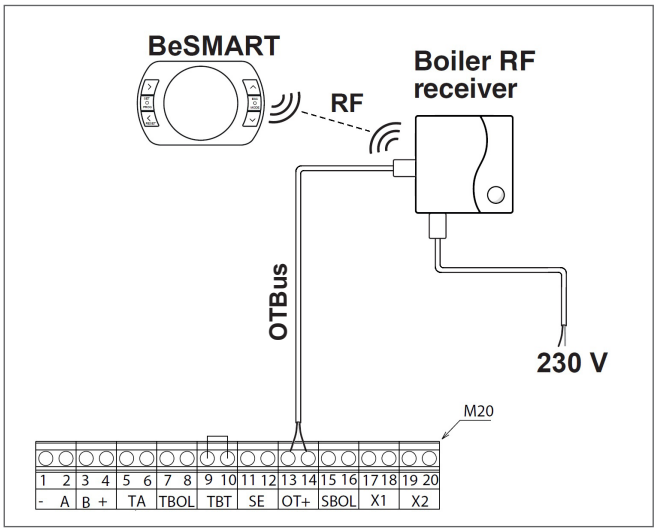

8.11 TYPICAL CONNECTION FROM REMOTE ROOM THERMOSTAT AND CLOCK – CONNECTED TO THE 'D-SUB' INTERFACE

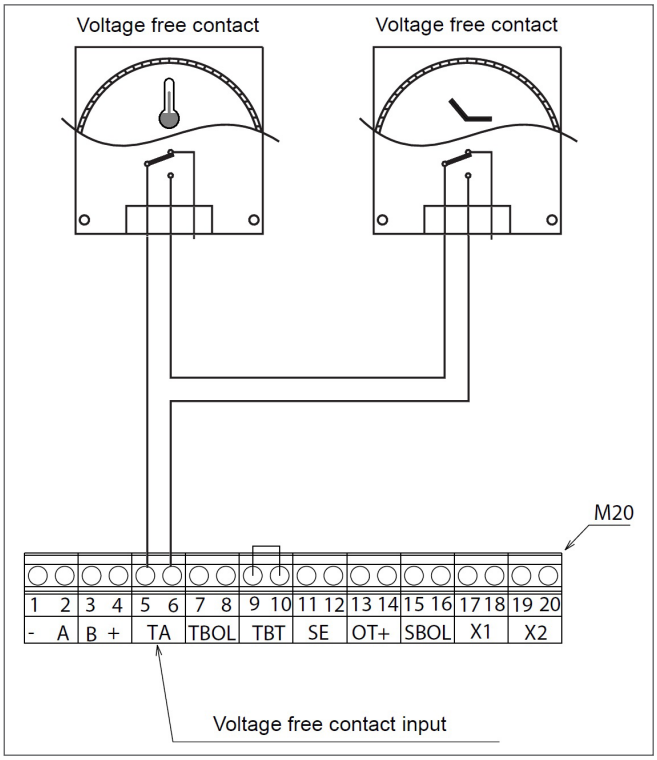

8.12 S-PLAN & Y-PLAN WIRING CONFIGURATIONS

Warning! – Failure to follow the wiring configurations as detailed below, may result in malfunction and/or internal damage to the appliance.

The **evolve** system boilers incorporate an internal relay that enables a direct switched 230v supply to be used to generate a heating or hot water request from an external control system such as Y-PLAN or S-PLAN.

To configure an S or Y PLAN control system with the **evolve** boiler, proceed as follows:

1. Isolate the appliance from the electrical supply and remove the front cover as detailed in section 5.7.1. gain access to the appliance PCB as detailed 5.7.3
2. Identify the internal relay PCB (BE11), which is located to the right hand side of the main control PCB
3. Route the external wiring from the Y-Plan/S-Plan control system through one of the cable entry points that are located on the lower right-side of the appliance
4. Using the (below) relevant diagram as a reference, connect the switched 230v supply (Live & Neutral) from the external control system (Y-Plan/S-Plan) to the small PCB (BE11) at terminals CN1
5. Replace the PCB cover ensuring that no internal wiring is trapped or strained
6. Replace the appliance front cover as detailed in 5.7.1.

NOTE

- Under no circumstances should the Y-Plan/S-Plan wiring be connected directly to the D-Sub interface and/or the TA connections.
- Ensure that the appliance and all other external controls, are served and isolated from the same electrical supply/isolator
- Ensure that the cable entry point is suitably sealed with silicone sealant or adhesive tape.

S-PLAN

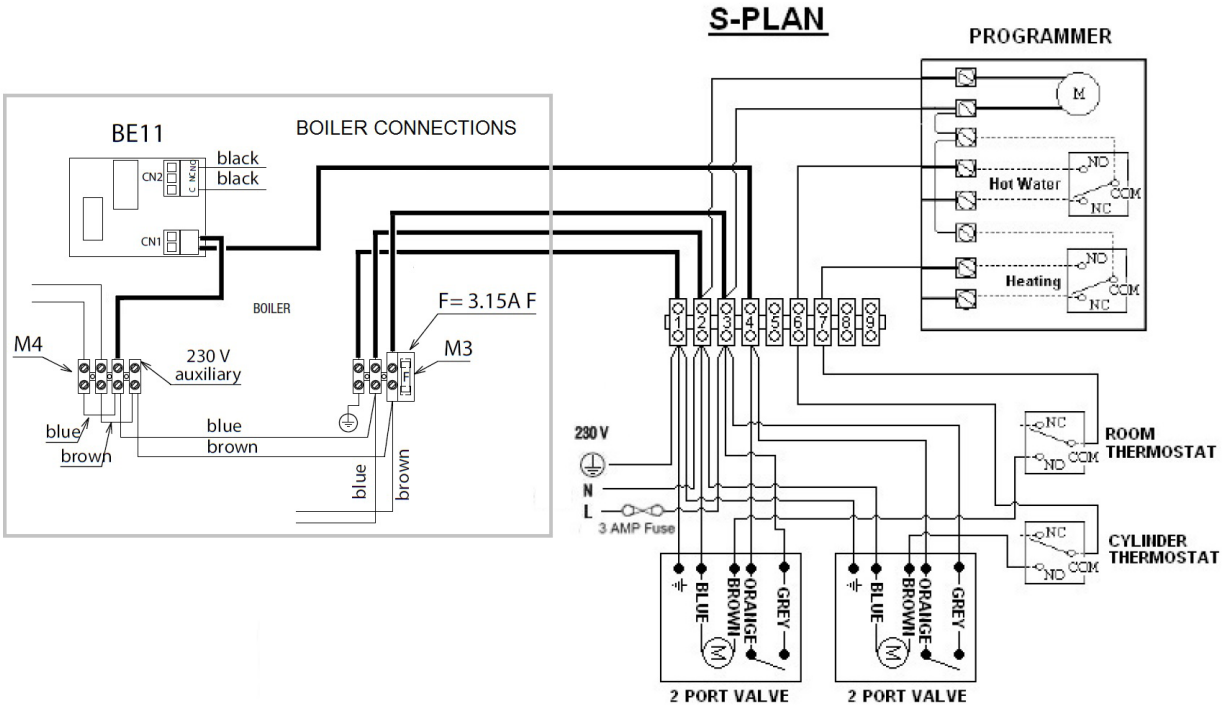
PROGRAMMER
BE11
BOILER CONNECTIONS
black
black
CN2
CN1
BOILER
F= 3.15A F
M4
M3
230 V
auxiliary
blue
brown
blue
brown
blue
brown
Hot Water
Heating
NO
COM
NC
ROOM
THERMOSTAT
CYLINDER
THERMOSTAT
230 V
N
L
3 AMP Fuse
BLUE
BROWN
ORANGE
GREY
2 PORT VALVE
2 PORT VALVE

Y-PLAN

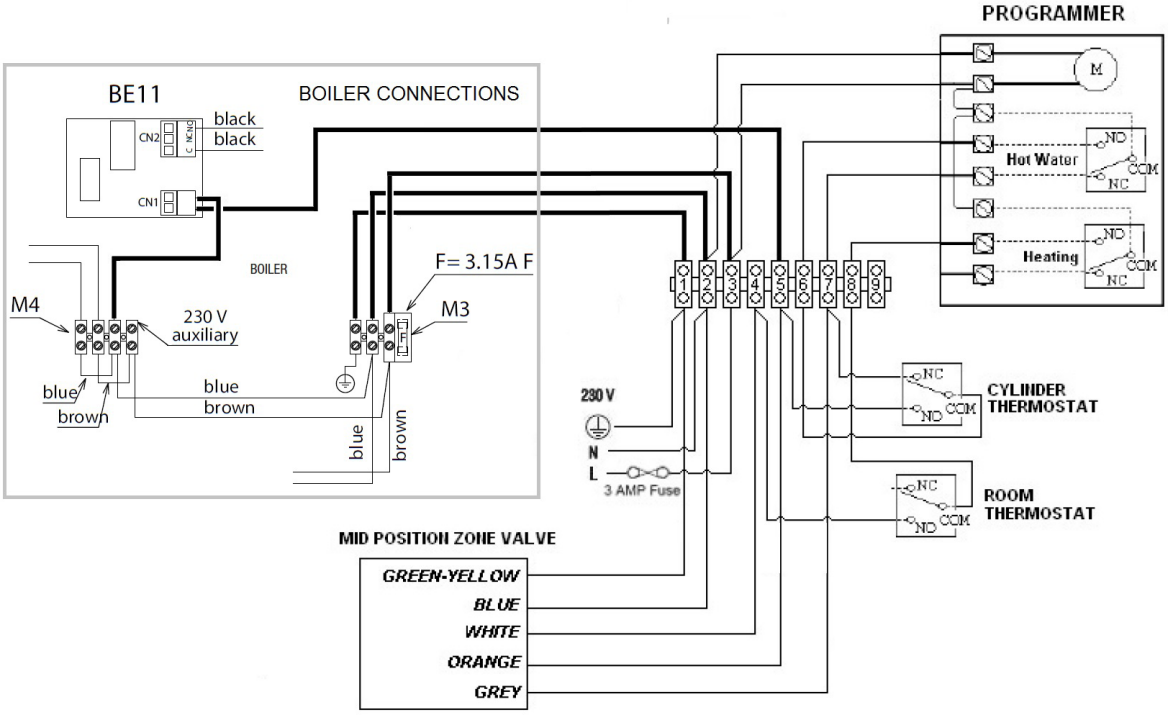
PROGRAMMER
BE11
BOILER CONNECTIONS
black
black
CN2
CN1
BOILER
F= 3.15A F
M4
M3
230 V
auxiliary
blue
brown
blue
brown
blue
brown
Hot Water
Heating
NO
COM
NC
CYLINDER
THERMOSTAT
ROOM
THERMOSTAT
230 V
N
L
3 AMP Fuse
MID POSITION ZONE VALVE
GREEN-YELLOW
BLUE
WHITE
ORANGE
GREY

FUNCTIONAL DIAGRAM

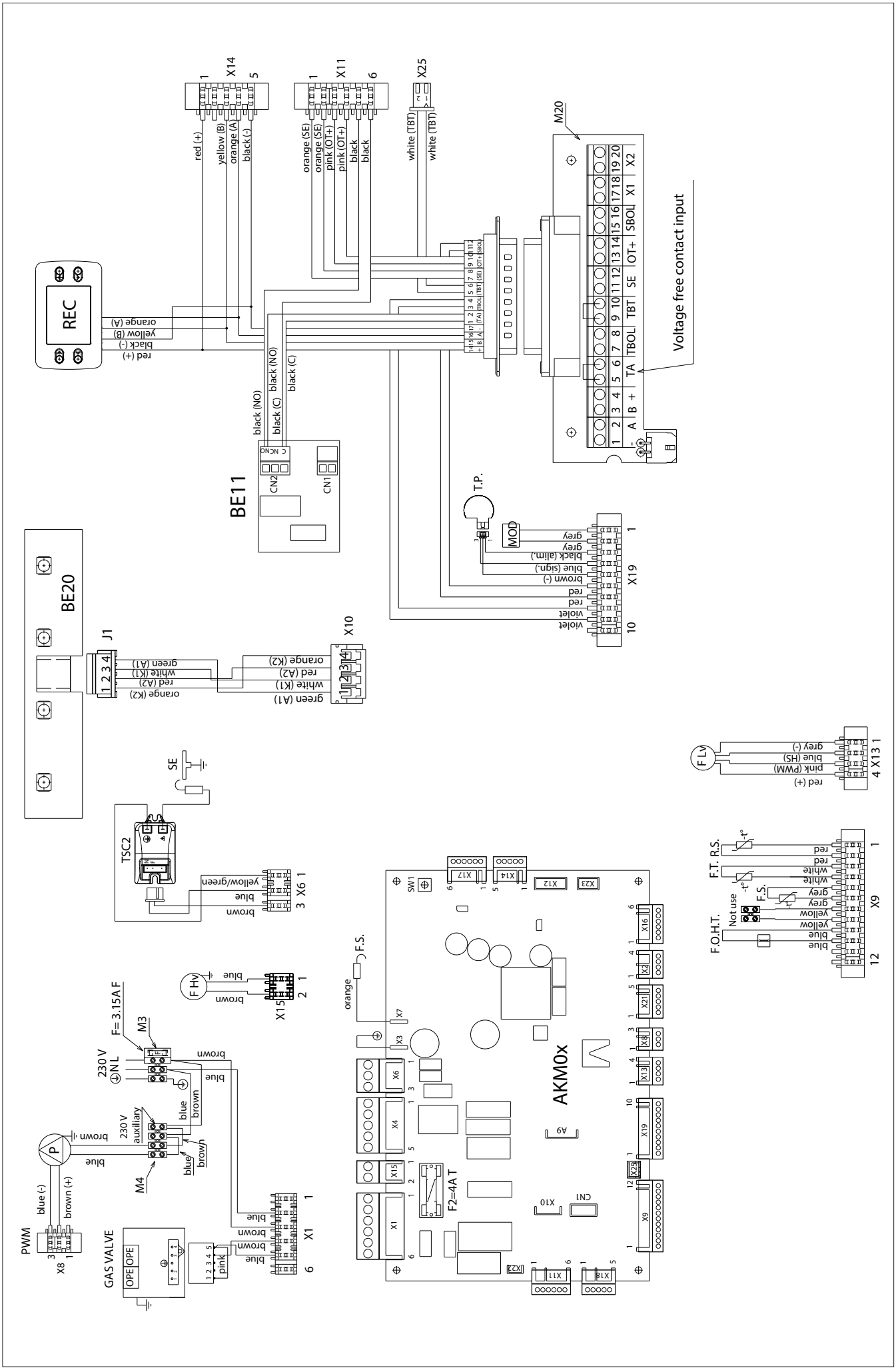

Key

AKM0X	Main PCB
REC	Remote control
BE20	Led board: green led (working status or temporary stop) red led (boiler lock out)
X1-X25-CN1	Connectors
S.W.	CO_2 function button
F.S.	Flame sensor
F	External fuse 3.15A F
F2	Fuse 4A T
M3-M4	Terminal strip for electrical connection high power
M20	Terminal box (- A B +) ● Bus 485 TA ● Room Thermosat (contact must be free of voltage) TBOL ● Thermostat water tank TBT ● Low temperature limit thermostat SE ● External sensor OT+ ● Open therm SBOL ● Sensor water tank X1 – X2 ● Not used
P	Pump
PWM	PWM signal
OPE	Gas valve solenoids
F Hv	Fan power supply 230 V
TSC2	Ignition transformer
S.E.	Spark electrode
F.O.H.T	Flow over heat thermostat
FS	Flue sensor
FT	Flow thermistor (NTC)
RS	Return thermistor (NTC)
P.T.	Pressure transducer
MOD	Modulator
F Lv	Fan signal control

SECTION 9 - LPG INSTRUCTIONS

9.1 RELATED DOCUMENTS

BS 6798		**INSTALLATION OF BOILERS OF RATED INPUT NOT EXCEEDING 60 kW**
BS 5449	**PART 1**	**FORCED CIRCULATION HOT WATER SYSTEMS**
BS 5440	**PART 1**	**FLUES**
BS 5482	**PART 1**	**DOMESTIC BUTANE & PROPANE GAS BURNERS IN PERMANENT DWELLINGS**

9.2 TECHNICAL DATA

Gas Pressures	**evolve 18S**	**evolve 24S**	**evolve 30S**	**evolve 35S**
Inlet pressure	37.0 mbar	37.0 mbar	37.0 mbar	37.0 mbar
Maximum gas rate	1.40 (kg/h)	1.86 (kg/h)	2.48 (kg/h)	2.72 (kg/h)
Minimum gas rate	0.40 (kg/h)	0.47 (kg/h)	0.56 (kg/h)	0.65 (kg/h)
Injector size (mm)	1 x Ø 4.3 mm	1 x Ø 4.3 mm	1 x Ø 6.0 mm	1 x Ø 6.0 mm
Number of fan rotations with slow ignition	5,500 (rpm)	5,500 (rpm)	5,000 (rpm)	5,000 (rpm)
Maximum number of heating fan rotations	5,600 (rpm)	6,500 (rpm)	7,100 (rpm)	7,000 (rpm)
Minimum number of heating fan rotations	2,000 (rpm)	2,000 (rpm)	2,000 (rpm)	2,000 (rpm)
Emissions				
NOx (max-min)	60 - 35 p.p.m.	40 - 40 p.p.m.	40 - 50 p.p.m.	30 - 40 p.p.m.
CO (max-min)	150 - 15 p.p.m.	200 - 30 p.p.m.	200 - 20 p.p.m.	180 - 20 p.p.m.
CO_2 (max-min) (*)	10.2 - 10.2 %	10.3 - 10.0 %	10.1 - 10.1 %	10.0 - 10.0 %

(*) CO_2 tolerance = +0.6% -1%

9.3 APPLIANCE RE-CONFIGURATION FOR LPG

WARNING!
The gas supply to the appliance must remain turned OFF until the following procedure has been completed.

1. Using the REC10 UI, navigate to STATE>BOILER and select 'OFF'.
2. Refer to Section 8 on how to access the 'Service' parameters, and use passkey '53' to navigate to **MENU>SETTINGS>TECHNICAL>COMBUSTION-MONITORING>GAS-TYPE**
3. Scroll to 'LPG' and press the select button.
4. Use the 'back' button to return to the 'TECHNICAL' menu and select 'CALIBRATION'.
5. Using the data in table 9.2, adjust the fan speed settings to the values indicated in 9.2 – pressing the select button to confirm each change.
6. Press and hold the 'back' button for 2-seconds to exit the 'Service' parameters menu.
7. Carry out a combustion check – as detailed in Section 6.12 – using the LPG values as indicated in table 9.2 above.

NOTE
The appliance gas valve is factory set and therefore non-adjustable. Do not attempt to adjust or interfere with the settings of the gas valve, as to do so, will cause the appliance to malfunction and may lead to serious damage.

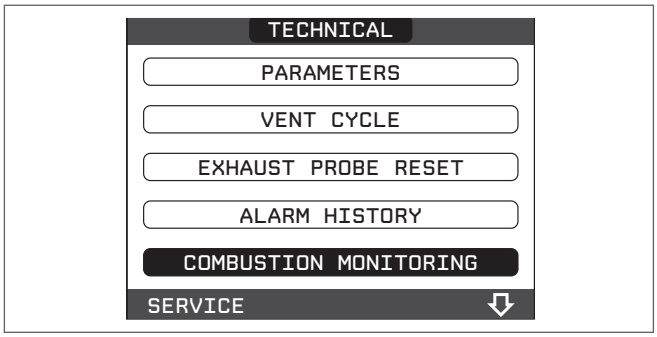

- select GAS TYPE

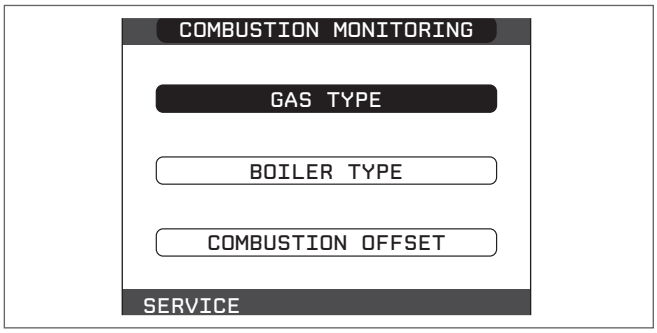

- select LPG

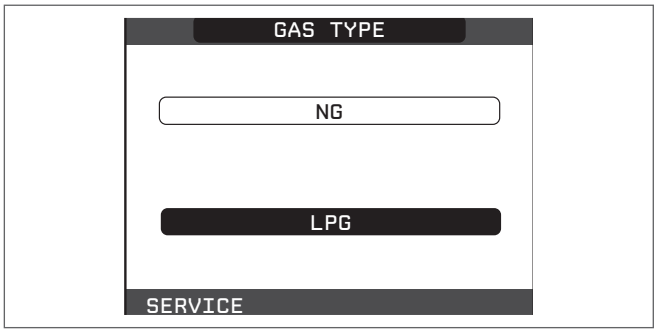

The boiler DOES NOT require additional adjustments.

⚠ The boiler may only be converted by qualified staff.

⚠ **After conversion apply the new rating plate contained in the kit.**

COMMISSIONING: CO AND COMBUSTION RATIO CHECK

BEFORE CO AND COMBUSTION RATIO CHECK

The installation instructions should have been followed, gas type verified and gas supply pressure/rate checked as required prior to commissioning.

As part of the installation process, **ESPECIALLY WHERE A FLUE HAS BEEN FITTED BY PERSONS OTHER THAN THE BOILER INSTALLER**, visually check the integrity of the whole flue system to confirm that all components are correctly assembled, fixed and supported. Check that the maximum flue lengths have not been exceeded and all guidance has been followed (e.g. Technical Bulletin 008).

The flue gas analyser should be of the correct type, as specified by BS 7967.

Before use, the flue gas analyser should have been maintained and calibrated as specified by the manufacturer. The installer must have the relevant competence for use of the analyser. Check and zero the analyser **IN FRESH AIR**, as per analyser manufacturer's instructions.

NOTE

The air/gas ratio valve is factory-set and must not be adjusted during commissioning unless this action is recommended, following contact with the Vokera technical help line. If any such adjustment is recommended and further checking of the boiler is required, the engineer must be competent to carry out this work and to use the flue gas analyser accordingly. If the boiler requires conversion to operate with a different gas family (e.g., conversion from natural gas to LPG) separate guidance will be provided by the Vokera technical help line and must be followed.

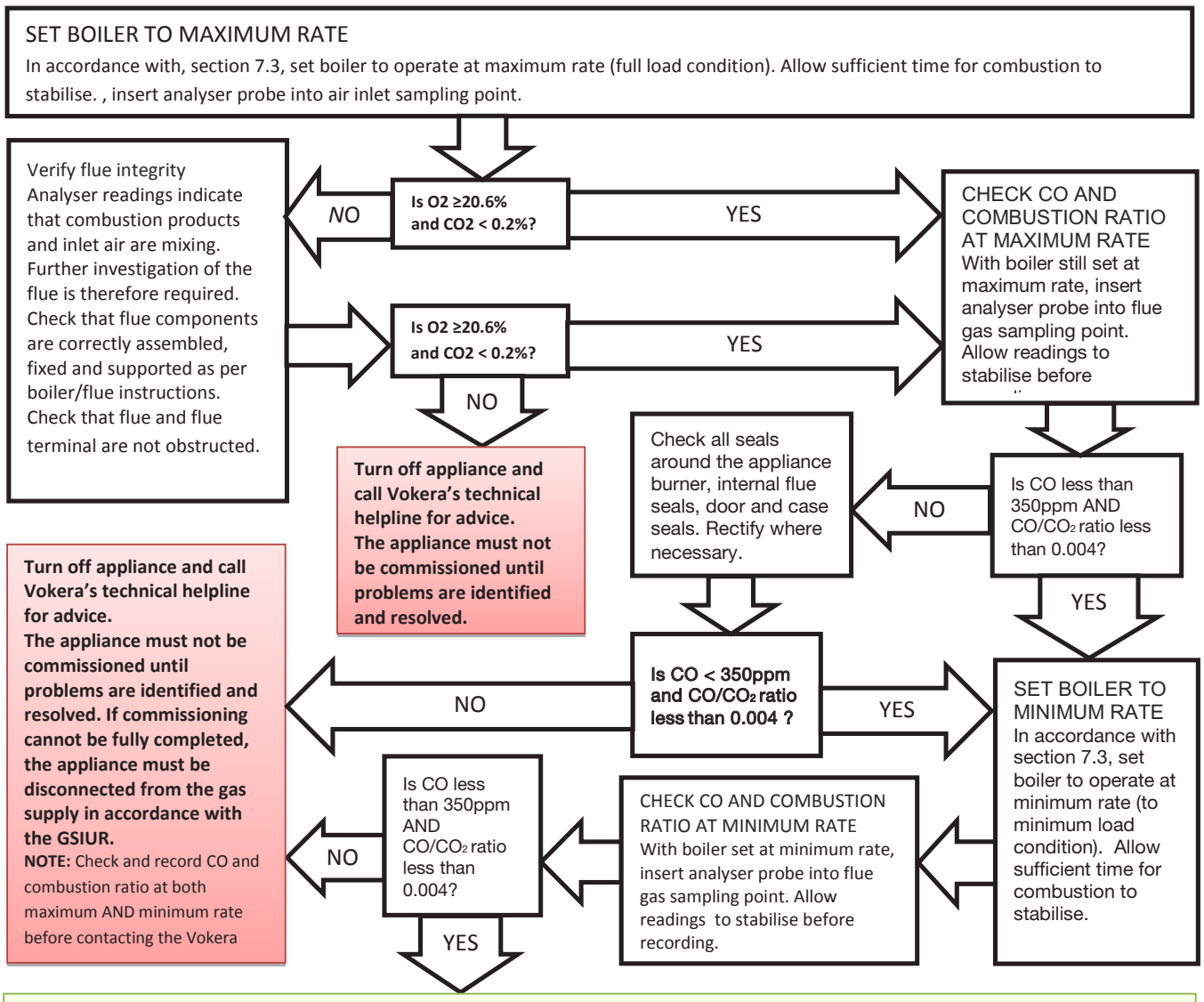

Boiler is operating satisfactorily
No further actions required.
Ensure test points are capped, boiler case is correctly replaced and all other commissioning procedures are completed.
Complete Benchmark Checklist, recording CO and combustion ratio readings as required.

Benchmark Commissioning and Servicing Section

It is a requirement that the boiler is installed and commissioned to the manufacturers instructions and the data fields on the commissioning checklist completed in full.

To instigate the boiler guarantee the boiler needs to be registered with the manufacturer within one month of the installation.

To maintain the boiler guarantee it is essential that the boiler is serviced annually by a Gas Safe registered engineer who has been trained on the boiler installed. The service details should be recorded on the Benchmark Service Interval Record and left with the householder.

benchmark
COLLECTIVE MARK
THE MARK OF QUALITY FOR THE INSTALLATION, COMMISSIONING AND SERVICING OF DOMESTIC HEATING AND HOT WATER SYSTEMS

www.centralheating.co.uk

© Heating and Hotwater Industry Council (HHIC)

GAS BOILER SYSTEM COMMISSIONING CHECKLIST

This Commissioning Checklist is to be completed in full by the competent person who commissioned the boiler as a means of demonstrating compliance with the appropriate Building Regulations and then handed to the customer to keep for future reference.

Failure to install and commission according to the manufacturer's instructions and complete this Benchmark Commissioning Checklist will invalidate the warranty. This does not affect the customer's statutory rights.

Customer name:	Telephone number:
Address:	
Boiler make and model:	
Boiler serial number:	
Commissioned by (PRINT NAME):	Gas Safe register number:
Company name:	Telephone number:
Company address:	
	Commissioning date:
To be completed by the customer on receipt of a Building Regulations Compliance Certificate*	
Building Regulations Notification Number (if applicable):	

CONTROLS (tick the appropriate boxes)				
Time and temperature control to heating	Room thermostat and programmer/timer		Programmable room thermostat	
	Load/weather compensation		Optimum start control	
Time and temperature control to hot water	Cylinder thermostat and programmer/timer		Combination Boiler	
Heating zone valves	Fitted		Not required	
Hot water zone valves	Fitted		Not required	
Thermostatic radiator valves	Fitted		Not required	
Automatic bypass to system	Fitted		Not required	
Boiler interlock			Provided	

ALL SYSTEMS				
The system has been flushed and cleaned in accordance with BS7593 and boiler manufacturer's instructions			Yes	
What system cleaner was used?				
What inhibitor was used?			Quantity	litres
Has a primary water system filter been installed?	Yes		No	

CENTRAL HEATING MODE measure and record:			
Gas rate	m³/hr	**OR**	ft³/hr
Burner operating pressure (if applicable)	mbar	**OR** Gas inlet pressure	mbar
Central heating flow temperature			°C
Central heating return temperature			°C

COMBINATION BOILERS ONLY				
Is the installation in a hard water area (above 200ppm)?	Yes		No	
If yes, and if required by the manufacturer, has a water scale reducer been fitted?	Yes		No	
What type of scale reducer has been fitted?				
DOMESTIC HOT WATER MODE Measure and Record:				
Gas rate	m³/hr	**OR**	ft³/hr	
Burner operating pressure (at maximum rate)	mbar	**OR** Gas inlet pressure at maximum rate	mbar	
Cold water inlet temperature			°C	
Hot water has been checked at all outlets	Yes		Temperature	°C
Water flow rate			l/min	

CONDENSING BOILERS ONLY		
The condensate drain has been installed in accordance with the manufacturer's instructions and/or BS5546/BS6798	Yes	

ALL INSTALLATIONS							
Record the following:	At max. rate:	CO	ppm	**AND**	CO/CO_2	Ratio	
	At min. rate: (where possible)	CO	ppm	**AND**	CO/CO_2	Ratio	
The heating and hot water system complies with the appropriate Building Regulations						Yes	
The boiler and associated products have been installed and commissioned in accordance with the manufacturer's instructions						Yes	
The operation of the boiler and system controls have been demonstrated to and understood by the customer						Yes	
The manufacturer's literature, including Benchmark Checklist and Service Record, has been explained and left with the customer						Yes	

Commissioning Engineer's Signature
Customer's Signature
(To confirm satisfactory demonstration and receipt of manufacturer's literature)

*All installations in England and Wales must be notified to Local Authority Building Control (LABC) either directly or through a Competent Persons Scheme. A Building Regulations Compliance Certificate will then be issued to the customer.

benchmark COLLECTIVE MARK
THE MARK OF QUALITY FOR THE INSTALLATION, COMMISSIONING AND SERVICING OF DOMESTIC HEATING AND HOT WATER SYSTEMS

© Heating and Hotwater Industry Council (HHIC)

www.centralheating.co.uk

SERVICE RECORD

It is recommended that your heating system is serviced regularly and that the appropriate Service Interval Record is completed.

Service Provider

Before completing the appropriate Service Record below, please ensure you have carried out the service as described in the manufacturer's instructions. Always use the manufacturer's specified spare part when replacing controls.

SERVICE 01					Date:
Engineer name:					
Company name:					
Telephone No:					
Gas safe register No:					
Record:	At max. rate:	CO	ppm	**AND**	CO_2 %
	At min. rate: (Where Possible)	CO	ppm	**AND**	CO_2 %
Comments:					
Signature					

SERVICE 02					Date:
Engineer name:					
Company name:					
Telephone No:					
Gas safe register No:					
Record:	At max. rate:	CO	ppm	**AND**	CO_2 %
	At min. rate: (Where Possible)	CO	ppm	**AND**	CO_2 %
Comments:					
Signature					

SERVICE 03					Date:
Engineer name:					
Company name:					
Telephone No:					
Gas safe register No:					
Record:	At max. rate:	CO	ppm	**AND**	CO_2 %
	At min. rate: (Where Possible)	CO	ppm	**AND**	CO_2 %
Comments:					
Signature					

SERVICE 04					Date:
Engineer name:					
Company name:					
Telephone No:					
Gas safe register No:					
Record:	At max. rate:	CO	ppm	**AND**	CO_2 %
	At min. rate: (Where Possible)	CO	ppm	**AND**	CO_2 %
Comments:					
Signature					

SERVICE 05					Date:
Engineer name:					
Company name:					
Telephone No:					
Gas safe register No:					
Record:	At max. rate:	CO	ppm	**AND**	CO_2 %
	At min. rate: (Where Possible)	CO	ppm	**AND**	CO_2 %
Comments:					
Signature					

SERVICE 06					Date:
Engineer name:					
Company name:					
Telephone No:					
Gas safe register No:					
Record:	At max. rate:	CO	ppm	**AND**	CO_2 %
	At min. rate: (Where Possible)	CO	ppm	**AND**	CO_2 %
Comments:					
Signature					

SERVICE 07					Date:
Engineer name:					
Company name:					
Telephone No:					
Gas safe register No:					
Record:	At max. rate:	CO	ppm	**AND**	CO_2 %
	At min. rate: (Where Possible)	CO	ppm	**AND**	CO_2 %
Comments:					
Signature					

SERVICE 08					Date:
Engineer name:					
Company name:					
Telephone No:					
Gas safe register No:					
Record:	At max. rate:	CO	ppm	**AND**	CO_2 %
	At min. rate: (Where Possible)	CO	ppm	**AND**	CO_2 %
Comments:					
Signature					

SERVICE 09					Date:
Engineer name:					
Company name:					
Telephone No:					
Gas safe register No:					
Record:	At max. rate:	CO	ppm	**AND**	CO_2 %
	At min. rate: (Where Possible)	CO	ppm	**AND**	CO_2 %
Comments:					
Signature					

SERVICE 10					Date:
Engineer name:					
Company name:					
Telephone No:					
Gas safe register No:					
Record:	At max. rate:	CO	ppm	**AND**	CO_2 %
	At min. rate: (Where Possible)	CO	ppm	**AND**	CO_2 %
Comments:					
Signature					

*All installations in England and Wales must be notified to Local Authority Building Control (LABC) either directly or through a Competent Persons Scheme. A Building Regulations Compliance Certificate will then be issued to the customer.

benchmark COLLECTIVE MARK
THE MARK OF QUALITY FOR THE INSTALLATION, COMMISSIONING AND SERVICING OF DOMESTIC HEATING AND HOT WATER SYSTEMS

© Heating and Hotwater Industry Council (HHIC)

www.centralheating.co.uk

Vokèra BY RIELLO

Cod. 20127584 - 10/17 - Ed. 6

RANGE RATED - EN 483

The max CH input of this boiler has been adjusted to_____ kW, equivalent to _____ rpm max CH fan speed.

Date___/____/____

Signature _____

Boiler serial number

_____

Registered address:
Vokèra Ltd
Borderlake House
Unit 7 Riverside Industrial Estate
London Colney
Herts AL2 1HG

enquiries@vokera.co.uk

www.vokera.co.uk
www.vokera.ie

Sales, General Enquires

T 0844 391 0999
F 0844 391 0998

Vokèra Ireland
West Court, Callan
Co Kilkenny
T 056 7755057
F 056 7755060

Vokèra Limited reserve the right to change specification without prior notice
Consumers statutory rights are not affected.

Company Reg No: 1047779