Vokèra
heating for life

Linea ONE

High efficiency combi boiler

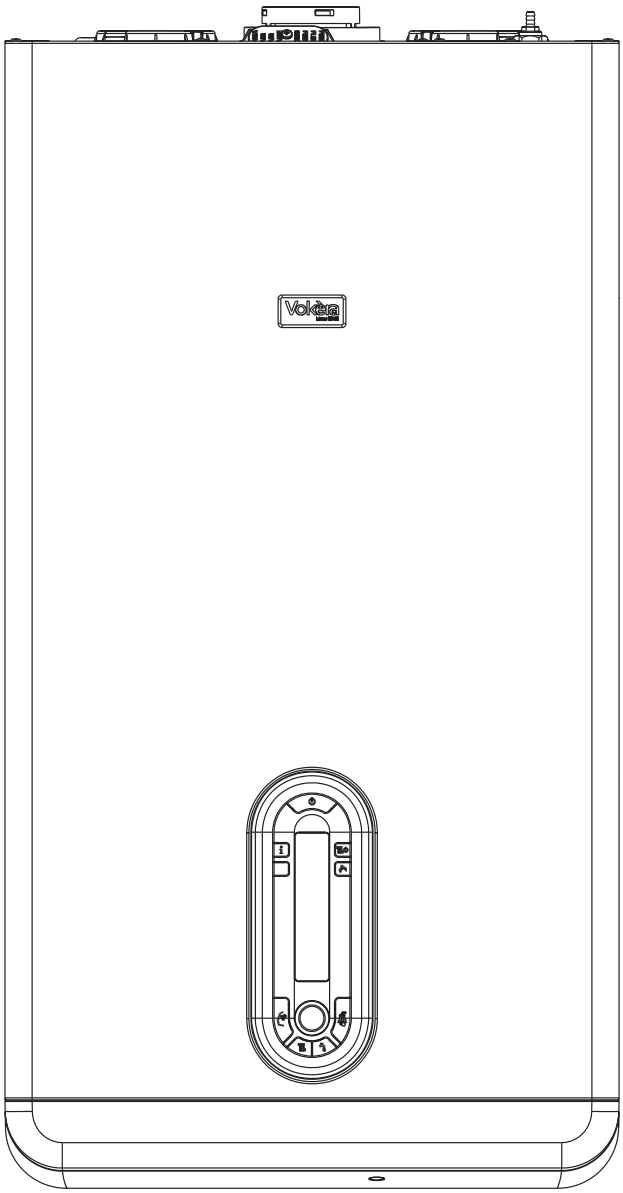

Installation & Servicing Instructions

CE

THESE INSTRUCTIONS
TO BE RETAINED
BY USER

benchmark
COLLECTIVE MARK
THE MARK OF QUALITY FOR THE INSTALLATION, COMMISSIONING AND SERVICING OF DOMESTIC HEATING AND HOT WATER SYSTEMS

Vokèra is a licensed member of the Benchmark scheme which aims to improve the standards of installation and commissioning of domestic hot water systems in the UK.

Contents

Design principles & operating sequence		Page
1.1	Principle components	3
1.2	Mode of operation	3
1.3	Mode of operation (Heating)	3
1.4	Mode of operation (DHW)	3
1.5	Safety devices	3
1.6	Optional accessories	3

Technical data		Page
2.1	Central heating	4
2.2	Domestic hot water	4
2.3	Gas pressure	4
2.4	Expansion vessel	4
2.5	Dimensions	4
2.6	Clearances	4
2.7	Connections	4
2.8	Electrical	4
2.9	Flue details (concentric)	4
2.9A	Flue details (twin pipes)	4
2.9B	Flue details (80/125)	4
2.10	Efficiency	4
2.11	Emissions	5
2.12	Range rated	5
2.13	Pump duty	5

General requirements (UK)		Page
3.1	Related documents	7
3.2	Location of appliance	7
3.3	Gas supply	7
3.4	Flue system	7
3.5	Air supply	7
3.6	Water circulation	7
3.7	Electrical supply	8
3.8	Timber framed buildings	8
3.9	Inhibitors	8
3.10	Showers	8

General requirements (EIRE)		Page
3A.1	Related documents	9
3A.2	Location of appliance	9
3A.3	Gas supply	9
3A.4	Flue system	9
3A.5	Air supply	9
3A.6	Water circulation	9
3A.7	Electrical supply	9
3A.8	Timber framed buildings	9
3A.9	Inhibitors	9
3A.10	Showers	9
3A.11	Declaration of conformity	9

Installation		Page
4.1	Delivery	10
4.2	Contents	10
4.3	Unpacking	10
4.4	Preparation for mounting the appliance	10
4.5	Fitting the flue	10
4.6	Connecting the gas & water	13
4.7	Electrical connections	14

Commissioning		Page
5.1	Gas supply installation	15
5.2	The heating system	15
5.3	Initial filling of the system	15
5.4	Initial flushing of the system	15
5.5	Filling the hot water system	15
5.6	Pre-operation checks	15
5.7	Initial lighting	15
5.8	Final flushing of the heating system	15
5.9	Setting the boiler operating temperature	15
5.10	Setting the system design pressure	16
5.11	Regulating the hot water	17
5.12	Final checks	17
5.13	Instructing the user	17

Servicing		Page
6.1	General	18
6.2	Routine annual servicing	18
6.3	Replacement of components	18
6.4	Component removal procedure	18
6.5	Pump assembly	18
6.6	Safety valve	19
6.7	Bottom automatic air release valves	19
6.8	Water pressure sensor/gauge	19
6.9	Primary thermistors	19
6.10	Return thermistors	19
6.11	Printed circuit board	19
6.12	Gas valve	19
6.13	Electrode and condense sensor	20
6.14	Flue fan & mixer	20
6.15	Burner	20
6.16	Main heat exchanger	20
6.17	Flow restrictor	21
6.18	DHW flow meter	21
6.19	DHW heat exchanger	21
6.20	Valve actuator	21
6.21	Divertor valve assembly	21
6.22	DHW thermistor	21
6.23	Automatic by-pass & DHW non-return valve	21
6.24	Expansion vessel	21
6.25	Condense trap removal	21
6.26	Flue collector removal	22

Checks, adjustments and fault finding		Page
7.1	Checking appliance operation	23
7.2	Appliance mode of operation	23
7.3	Service mode & parameters	25
7.4	Adjustments	27
7.5	Combustion analysis test	28
7.6	Checking the expansion vessel	28
7.7	External faults	28
7.8	Electrical checks	28
7.9	Fault finding	28
7.10	Temporary fault codes	28
7.11	Final fault codes	28

Wiring diagrams		Page
8.1	External wiring	30
8.2	Typical control applications	30
8.3	Vokera room thermostat	30
8.4	Other devices	30

Exploded diagrams		Page
9.1	Table 1	33
9.2	Table 2	34
9.3	Table 3	35
9.4	Table 4	36
9.5	Table 5	37

L.P.G. instructions		Page
10.1	Related documents	38
10.2	Technical data	38
10.3	Converting the appliance gas type	38
10.4	Gas supply	38
10.5	Gas supply installation	38
10.6	Adjusting the gas valve	38

	Benchmark	39-40

RANGE RATED

This boiler can be adapted to the heating requirements of the system, it is possible to change the maximum output in central heating.
Refer to chapter “Adjustments” for calibration.
After setting the desired output (parameter 23 maximum heating) report the value in the table on the back cover of this manual, for future references.

INSTALLATION AND SERVICING INSTRUCTIONS

INTRODUCTION

There are no banned substances used in the manufacture of these appliances.

The Linea ONE is a high-efficiency combination boiler with inputs to heating 30 kW & DHW of 38 kW. Each appliance – by design – incorporates electronic ignition, circulating pump, expansion vessel, safety valve, water pressure sensor and automatic by-pass.
The Linea ONE is produced as room sealed, category II2H3P appliances, suitable for internal wall mounting applications only.

It is provided with a fan powered flue outlet with an annular co-axial combustion air intake that can be rotated – horizontally – through 360 degrees for various horizontal or vertical applications. The Linea ONE can also be used with the Vokera twin flue system.
The Linea ONE is approved for use with B23P-B53P-C13-C23-C33-C43-C53-C63-C83-C93 type flue applications.
These appliances are designed for use with a sealed system only; consequently they are not intended for use on open vented systems nor are they intended for external applications.

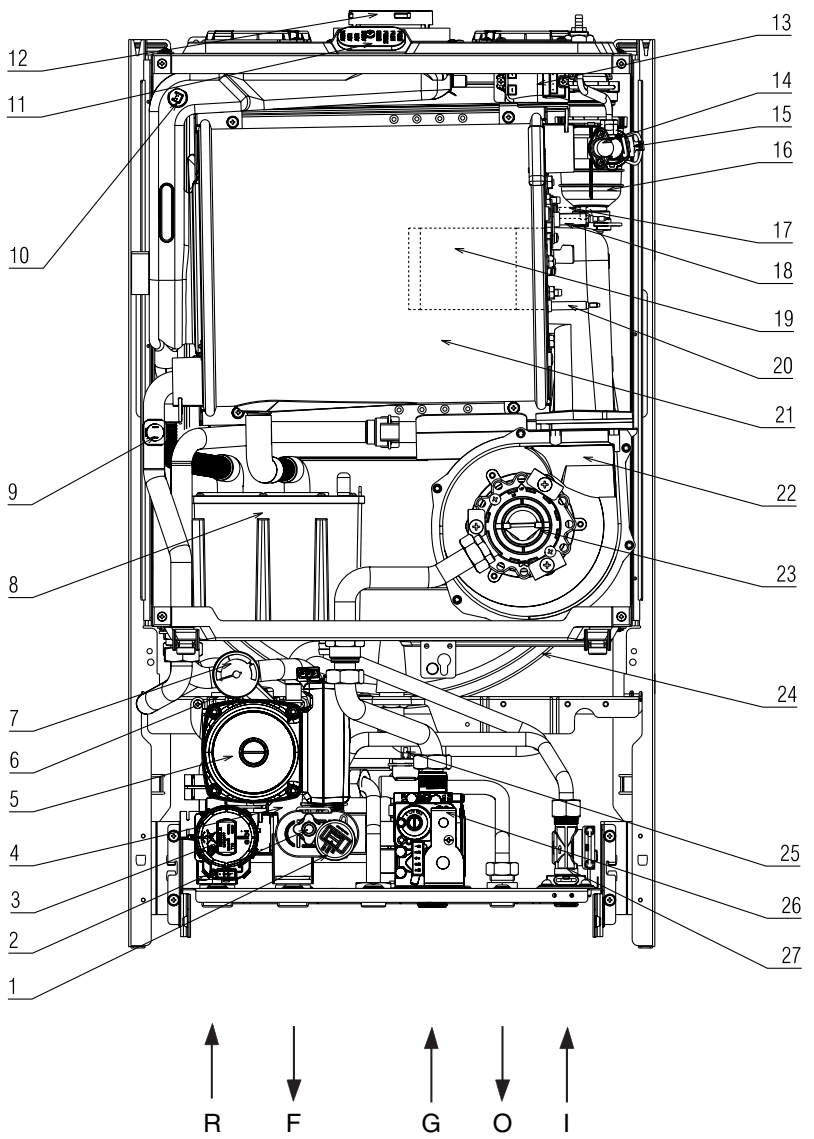

Fig. 1

General layout (fig. 1)

1 Water pressure sensor /trasducer
2 Drain valve
3 Three port valve actuator
4 DHW heat exchanger
5 Pump
6 Bottom auto air vent (AAV)
7 Pressure gauge
8 Condense trap
9 Return sensor
10 Fumes sensor
11 Flue gas analysis test point
12 Flue outlet & air intake
13 Ignition transformer
14 Limit thermostat
15 Flow temperature sensor
16 Top AAV
17 Sensing electrode
18 Spark electrode
19 Cylindric Burner
20 Condensate level sensor
21 Main heat exchanger
22 Fan assembly
23 Mixer
24 Expansion vessel
25 DHW temperature sensor
26 Gas valve
27 Flow meter

R Heating return connection
F Heating flow connection
G Gas connection
O Hot water outlet
I Cold water inlet

MAIN FEATURES

- Fully automatic modulating circulation pump
- High performances in DHW mode, 3 stars according EN 13203-1 (flow meter and larger DHW heat exchanger)
- Combustion Range Rated, output adjustable according the designed home energy requirement
- Premix fully condensing combustion

PRIMARY INFORMATION

CONTROLS INTERFACE

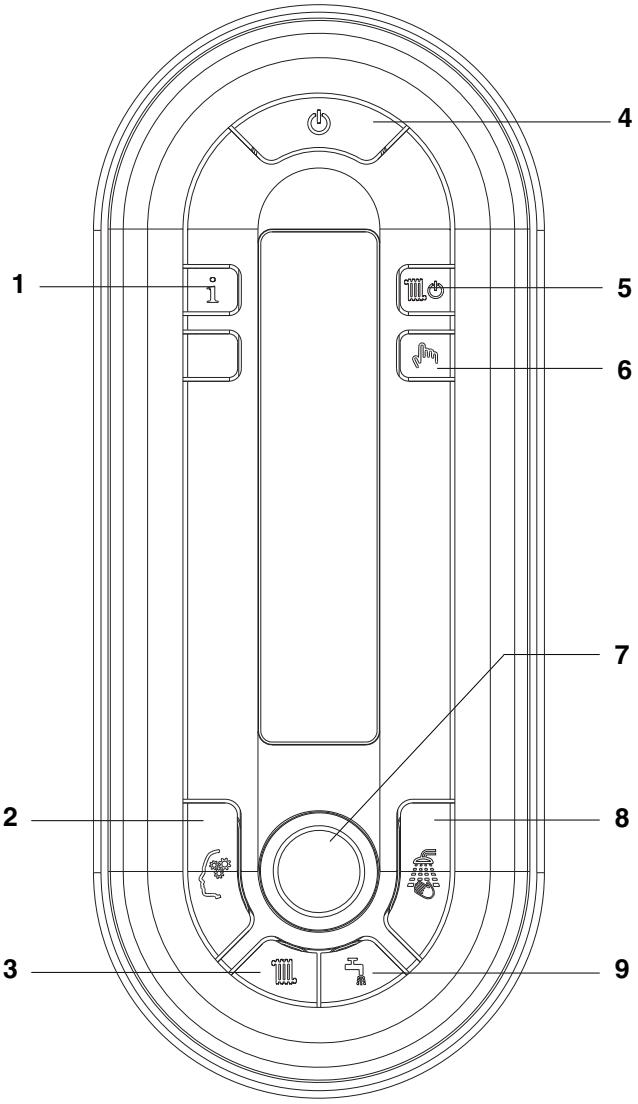

1 **Info button**
Enables the function that allows the access to some information regarding the boiler operation.

2 **Memory button**
Enables the Memory function.

3 **Heating temperature adjustment button**
Allows the access to the adjustment of the heating water temperature by using the selector.

4 **ON/OFF/RESET button**
Allows you to:
- switch on the boiler
- switch off the boiler
- restart the boiler after a fault stop.

5 **Heating ON/OFF button**
Enables/disables the heating function

6 **Dedicated to the Technical Assistance Service**
Enables or disables the boiler's self-operation.

7 **Encoder (adjustment selector)**
Allows you to increase or decrease the preset values.

8 **Comfort button**
Enables Comfort function.

9 **DHW temperature adjustment button**
Allows the access to the adjustment of DHW temperature by using the selector.

fig. 2

SECONDARY INFORMATION

DISPLAY

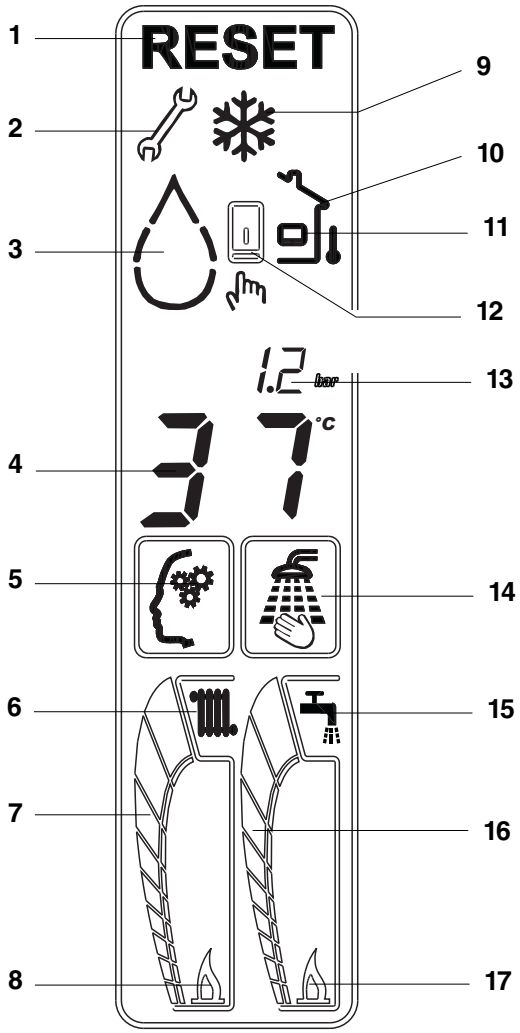

1 **Reset symbol**
Indicates when it is necessary to restart the boiler (please read page 42 for details).

2 **Key symbol**
Indicates the presence of a fault (please read page 42 for details).

3 **Drop symbol**
Displaying that the system pressure is under the correct level

4 Displaying the operating temperature (DHW or heating).

5 **Memory symbol**
It is displayed when Memory function is on.

6 **Heating symbol**
Flashing, indicates a heating request in the room.

7 **Heating layer**
Indicates the position of the set heating temperature (position relative to the maximum and minimum).

8 When the heating flame is on, it indicates that the burner is on following a heat request in the room.

9 **Anti-freeze symbol**
It is displayed when the anti-freeze function is on.

10 **External probe symbol**
It is displayed when the external probe is connected.

11 **Remote control panel**
It is displayed when a remote control panel is connected.

12 **Service icon**
Indicates the boiler is self-operating.

13 Pressure value of the heating installation.

14 **Comfort symbol**
It is displayed when the Comfort function is on.

15 **DHW symbol**
Flashing, indicates a DHW request.

16 **DHW layer**
Indicates the position of the DHW temperature set (position relative to the maximum and minimum).

17 When the DHW flame is on, it indicates that the burner is on following a DHW request.

SECTION 1 - DESIGN PRINCIPLES AND OPERATING SEQUENCE

1.1 PRINCIPLE COMPONENTS

- A fully integrated electronic control board featuring electronic temperature control, anti-cycle control, pump over-run, self-diagnostic fault indicator and premix burner control
- Low-water-content, aluminium heat exchanger
- Electronic ignition with flame supervision
- Integral high-head pump
- Fan
- Expansion vessel
- Water pressure sensor/gauge
- Two-stage gas valve
- Condensate level sensor
- Safety valve

1.2 MODE OF OPERATION (see section 7 for detailed information)

When the appliance is connected to the electrical supply, there are 5-possible modes of operation:

- STANDBY- Heating and DHW functions are disabled, however anti-freeze and anti-seize functions are active*
- HEATING ON- Heating and DHW functions enabled with TOUCH & GO function and SARA function active
- HEATING OFF - DHW only enabled, TOUCH & GO function active

* Anti-freeze & anti-seize functions are active in all operating modes.

1.3 MODE OF OPERATION (Heating)

When there is a request for heat via the programmer/time clock and/or any external control, the pump and fan are started, the fan speed will modulate until the correct signal voltage is received at the control PCB. At this point an ignition sequence is enabled.

Ignition is sensed by the electronic circuitry to ensure flame stability at the burner. Once successful ignition has been achieved, the electronic circuitry increases the gas rate to 75% for a period of 15 minutes (adjustable, see parameter 28, cap. 7.3.1). Thereafter, the boiler's output will either increase to maximum or modulate to suit the set requirement. When the appliance reaches the desired temperature the burner will shut down and the boiler will perform a five-minute anti-cycle (timer delay). When the request for heat has been satisfied the appliance pump and fan may continue to operate to dissipate any residual heat within the appliance.

1.4 MODE OF OPERATION (DHW)

When there is a request for DHW via a hot water outlet or tap, the pump and fan are started, the fan speed will modulate until the correct signal voltage is received at the control PCB. At this point an ignition sequence is enabled.

Ignition is sensed by the electronic circuitry to ensure flame stability at the burner. Once successful ignition has been achieved, the electronic circuitry increases the gas rate to maximum or will modulate output to stabilise the temperature.

In the event of the appliance exceeding the desired temperature (set point) the burner will shut down until the temperature drops*.

When the request for DHW has been satisfied the appliance pump and fan may continue to operate to dissipate any residual heat within the appliance.

*When the appliance is in the SUMMER mode, the burner will remain on minimum power even if the set point has been achieved.

1.5 SAFETY DEVICES

When the appliance is in use, safe operation is ensured by:

- a water pressure sensor that monitors system water pressure and will de-activate the pump, fan, and burner should the system water pressure drop below the rated tolerance;
- 2 temperature sensors that control and prevent the over-heating of the circuit, interrupting the operation of the burner;
- a differential temperature protection circuit which interrupts the burner if the temperature differential is too high or inverted;
- a fan speed sensor that checks the correct operation of the fan, thereby allowing safe operation of the burner;
- a sensor that interrupts the operation of the appliance if the condense pipe becomes blocked;
- a safety valve which releases excess pressure from the primary circuit.

1.6 OPTIONAL ACCESSORIES

The Linea ONE is suitable for use with a range of optional accessories that enable enhanced operation and/or applications. These include:

- external sensor that enables the appliance to automatically adjust its outlet flow temperature in response to the outside temperature
- RF wireless room thermostat.

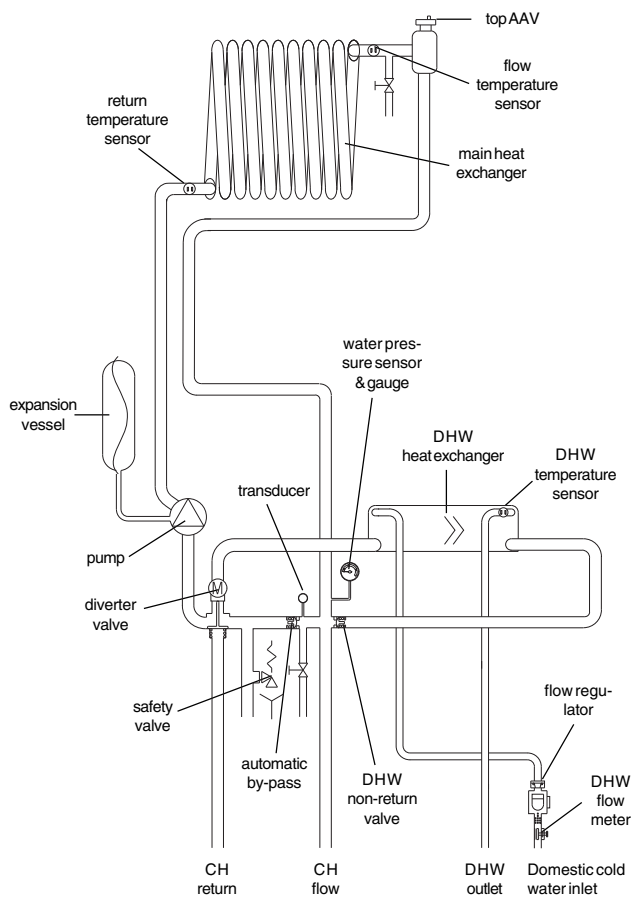

Fig. 3

SECTION 2 - TECHNICAL DATA

2.1 Central Heating	Linea ONE
Heat input (kW)	30.00
Maximum heat output @ 60/80 °C (kW)	29.34
Maximum heat output @ 30/50 °C (kW)	31.92
Minimum heat output @ 60/80 °C (kW)	3.70
Minimum heat output @ 30/50 °C (kW)	4.02
Minimum working pressure	0.50 bar
Maximum working pressure	3 bar
Minimum flow rate	1000 litres per hour
2.2 Domestic Hot Water	
Maximum input (kW)	38.10
Maximum output (kW)	38.10
Minimum input (kW)	3.80
Flow rate (35 °C rise)	15.60
Maximum inlet pressure	6.0 bar
Minimum inlet pressure	0.15 bar
Minimum flow rate	2.0 l/min
2.3 Gas Pressures	
Inlet pressure (G20)	20.0 mbar
Maximum CH gas rate (m^3/hr)	3.17
Maximum DHW gas rate (m^3/hr)	4.03
Minimum gas rate (m^3/hr)	0.40
Nozzles size	2 x Ø 4.2mm
Fan speed @ max output (rpm) DHW	6.200
Fan speed @ max output (rpm) HTG	5.000
Fan speed @ min output (rpm)	1.200
2.4 Expansion Vessel	
Capacity	10 litres
Maximum system volume	91 litres
Pre-charge pressure	1.0 bar
2.5 Dimensions	
Height	845 mm
Width	453 mm
Depth	358 mm
Dry weight (Kg)	44.0
2.6 Clearances (see fig. 6A)	
Sides	Left =12 mm / Right = 25mm
Top	150 mm from casing or 25 mm above flue elbow (whichever is applicable)
Bottom	150 mm
Front	600 mm
2.7 Connections	
Flow & return	22 mm
Hot & cold water	15 mm
Gas	15 mm
Safety valve	15 mm
Condense	21 mm
2.8 Electrical	
Voltage (V/Hz)	230/50
Power consumption (W)	150
Internal fuse	2A
External fuse	3A
2.9 Flue details (concentric)	
Maximum horizontal flue length (60/100mm)	3.85m
Maximum vertical flue length (60/100mm)	4.85m
2.9A Flue details (twin pipes)	
Maximum horizontal flue length (80mm+80mm)	30m+30m
Maximum vertical flue length (80mm+80mm)	30m+30m
2.9B Flue details (80/125mm)	
Maximum horizontal flue length (80/125mm)	10m
Maximum vertical flue length (80/125mm)	12 m
2.10 Efficiency	
SEDBUK (%)	90.16 (A)
NOx class	5

2.11 Emissions	Linea ONE
NOx (max-min)	53 - 26 mg/kWh
CO (max-min)	161 - 11 mg/kWh
CO_2 (max-min)	9,0 - 9,5 %
CO/CO_2 ratio (max)	0,0016 to 1
CO/CO_2 ratio (min)	0,0001 to 1

Ref. Condition 15 °C, 1013,25 mbar, dry gas
NOTE: L.P.G. data refer to section 10

2.12 Range rated (parameter 23)		
Input	**fan speed (rpm)**	**CO (ppm) - less than**
3,8 kW	1200	10
6 kW	1750	20
8 kW	2050	28
10 kW	2300	35
12 kW	2600	45
14 kW	2850	55
16 kW	3100	65
18 kW	3350	75
20 kW	3650	85
22 kW	3850	97
24 kW	4150	108
26 kW	4400	120
28 kW	4650	130
30 kW	5000	150

2.13 PUMP DUTY

Linea ONE boilers are fitted with a variable speed circulation unit that is already connected up in terms of plumbing and electrics, and the usable performance it provides is shown in the graph.
The boilers are fitted with an anti-blocking system that starts an operating cycle every 24 hours when not used, irrespective of the position of the function selector.

The “anti-blocking” function is only active when the electrical power supply to the boiler is on.

Operating the circulation system without any water is strictly forbidden.

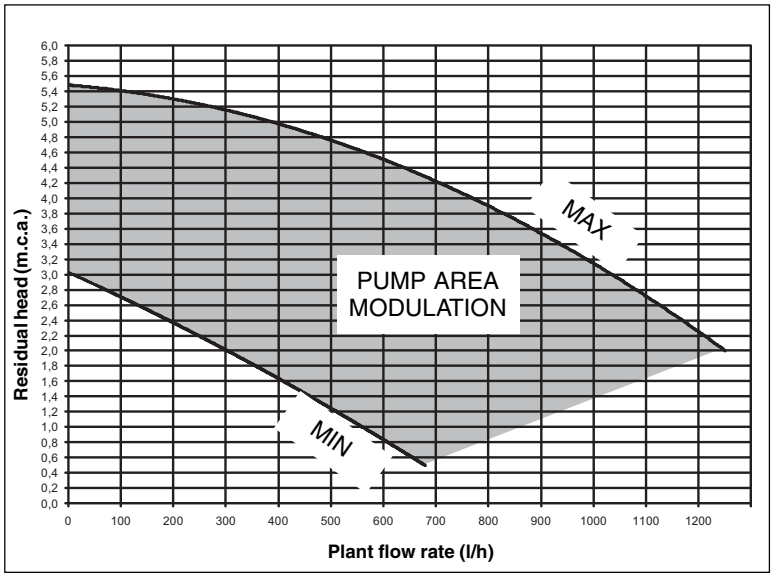

VARIABLE SPEED CIRCULATION UNIT

The modulating circulating function is only active for the heating function. When switching the three ways on the plate heat exchanger, the circulation unit is set at maximum speed. The modulating circulation function applies only to the boiler circulation unit and not to circulation units on any external devices connected to it (e.g. booster circulation unit).
Any of 4 operating modes can be chosen, depending on situations and the type of plant.
By accessing parameter 90 in the technical menu, one of the following possibilities can be chosen:

1 - VARIABLE SPEED CIRCULATION UNIT WITH PROPORTIONAL MODE (41 <= P90 <= 90)
2 - VARIABLE SPEED CIRCULATION UNIT WITH CONSTANT DT MODE (2 <= P90 <= 40)
3 - VARIABLE SPEED CIRCULATION UNIT WITH MAXIMUM FIXED MAXIMUM SPEED MODE (P90 = 1)
4 - EXCEPTIONAL USE OF A STANDARD CIRCULATION UNIT WITHOUT SPEED ADJUSTMENT (P90 = 0)

1 - VARIABLE SPEED CIRCULATION UNIT WITH PROPORTIONAL MODE (41 <= P90 <= 90)

In this mode the boiler’s board determines what flow rate curve to adopt according to the instantaneous power supplied by the boiler.
The boiler controller breaks down the power range within which the boiler operates in heating mode into various levels. Depending on the power level in use when heating, one of the speeds available is selected automatically according to a linear logic: Maximum power = high speed, minimum power = low speed.
This is used on all types of plants where the machine’s power has been correctly balanced with the plant’s real needs.

Operationally:
- Access parameter 90
- Set the parameter = 41

Note: The parameter 90 = 41 setting is recommended by the manufacturer.
Values exceeding 41 are used in specific cases.

2 - VARIABLE SPEED CIRCULATION UNIT WITH CONSTANT DT MODE (2 <= P90 <= 40)

In this mode the installer sets the ΔT value to be maintained between the delivery and return (e.g. if a value of 10 is entered, the circulation unit’s speed will change to implement a plant flow rate aimed at maintaining the ΔT between upstream and downstream of the heat exchanger at 10°C).
By periodically sampling the values provided by the boiler delivery/return sensors, the board increases or decreases the circulation unit’s speed and therefore the plant’s flow rate. If the sampling shows a ΔT value lower than that set, the speed is reduced until the ΔT increases to the value set. Vice-versa is sampling is higher than the value set, the speed is increased.
This is used for direct high temperature plants (typical of replacement), where the boiler is not thermostatically controlled, and where a calculated ΔT can be set.
When working with a constant delivery temperature and attainment of stabilising the ambient conditions, the average temperature of the

radiators tends to increase. By keeping ΔT constant, the reduction in the flow rate is obtained by changing the operating curve, which produces a lower return temperature that in turn favours high boiler performance and the reduction of electricity consumption.
Operationally:
- Access parameter 90
- Set the parameter at a value between 2 and 40 (normally between 10 and 20).

3 - VARIABLE SPEED CIRCULATION UNIT WITH MAXIMUM FIXED MAXIMUM SPEED MODE (P90 = 1)
In this mode the modulating circulation unit works constantly at maximum speed.
It is used on plants with a high load loss in which the boiler's head must be used as much as possible in order to guarantee sufficient circulation (plant flow rate at maximum speed lower than 600 litres per hour).
This is used when bottles of mixture are involved, with high flow rates in the circuit downstream.
Operationally:
- Access parameter 90
- Set the parameter = 1

4 – EXCEPTIONAL USE OF A STANDARD CIRCULATION UNIT WITHOUT SPEED ADJUSTMENT (P90 = 0)
This mode must be used in exceptional cases in which the boiler is to be used with a traditional circulation unit without a speed adjustment. It presupposes that the adjustable speed circulation unit has been removed and replaced with a non-adjustable speed circulation unit. **Warning !!!!** the BE06 board connected to connector CN9 must be removed and replaced with a connector with a jumper to be inserted into connector CN9. This latter connection is obligatory and if not formed may cause the system to malfunction.
Operationally:
- Access parameter 90
- Set the parameter = 0

CONFIGURATIONS RECOMMENDED BY THE MANUFACTURER

	EXTERNAL SENSOR YES (TERMOREGULATION)	EXTERNAL SENSOR NO (NO TERMOREGULATION)
HIGH TEMPERATURE (radiators without thermostatic valves)	PROPORTIONAL (P90 = 41)	ΔT constant (2 ≤ P90 ≤ 40)
LOW TEMPERATURE (floor)	PROPORTIONAL (P90 = 41)	PROPORTIONAL (P90 = 41)
HIGH TEMPERATURE (radiators with thermostatic valves)	PROPORTIONAL (P90 = 41)	PROPORTIONAL (P90 = 41)

Fig. 4

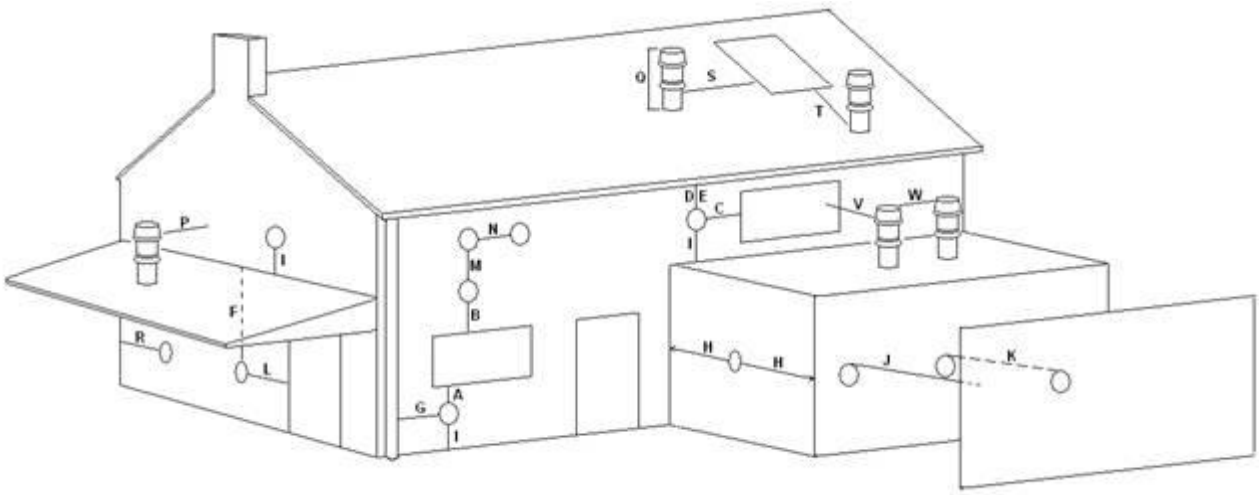

Key	Location	Minimum distance
A	Below an opening (window, air-brick, etc.)	300 mm
B	Above an opening (window, air-brick, etc.)	300 mm
C	To the side of an opening (window, air-brick, etc.)	300 mm
D	Below gutter, drain-pipe, etc.	25 mm
E	Below eaves	25 mm
F	Below balcony, car-port roof, etc.	25 mm
G	To the side of a soil/drain-pipe, etc.	25 mm (60mm for 80/125 - 5" flue)
H	From internal/external corner	25 mm (60mm for 80/125 - 5" flue)
I	Above ground, roof, or balcony level	300 mm
J	From a surface or boundary facing the terminal	600 mm
K	From a terminal facing a terminal	1200 mm
L	From an opening in the car-port into the building	1200 mm
M	Vertically from a terminal on the same wall	1500 mm
N	Horizontally from a terminal on the same wall	300 mm
P	From a structure to the side of the vertical terminal	300 mm
Q	From the top of the vertical terminal to the roof flashing	As determined by the fixed collar of the vertical terminal
R	To the side of a boundary	300 mm
S	To the side of an opening or window on a pitched roof	600 mm
T	Below an opening or window on a pitched roof	2000 mm
V	From a vertical terminal to an adjacent opening (window, air-brick, etc.)	(call Vokera technical for advice)
W	From a vertical terminal to an adjacent vertical terminal	300 mm (only if both terminals are the same hight)

SECTION 3 - GENERAL REQUIREMENTS (UK)

This appliance must be installed by a competent person in accordance with the Gas Safety (Installation & Use) Regulations.

3.1 RELATED DOCUMENTS

The installation of this boiler must be in accordance with the relevant requirements of the Gas Safety (Installation & Use) Regulations, the local building regulations, the current I.E.E. wiring regulations, the bylaws of the local water undertaking, the Building Standards (Scotland) Regulation and Building Standards (Northern Ireland) Regulations.
It should be in accordance also with any relevant requirements of the local authority and the relevant recommendations of the following British Standard Codes of Practice.

3.2 LOCATION OF APPLIANCE

The appliance may be installed in any room or internal space, although particular attention is drawn to the requirements of the current I.E.E. wiring regulations, and in Scotland, the electrical provisions of the Building Regulations, with respect to the installation of the appliance in a room or internal space containing a bath or shower.

BS 5440	**PART 1**	**FLUES**
BS 5440	**PART 2**	**FLUES & VENTILATION**
BS 5449	**PART 1**	**FORCED CIRCULATION HOT WATER SYSTEMS**
BS 5546		**INSTALLATION OF GAS HOT WATER SUPPLIES FOR DOMESTIC PURPOSES**
BS 6798		**INSTALLATION OF BOILERS OF RATED INPUT NOT EXCEEDING 60kW**
BS 6891		**LOW PRESSURE INSTALLATION PIPES**
BS 7074	**PART 1**	**APPLICATION, SELECTION, AND INSTALLTION OF EXPANSION VESSELS AND ANCILLARY EQUIPMENT FOR SEALED WATER SYSTEMS**

When an appliance is installed in a room or internal space containing a bath or shower, the appliance or any control pertaining to it must not be within reach of a person using the bath or shower. The location chosen for the appliance must permit the provision of a safe and satisfactory flue and termination. The location must also permit an adequate air supply for combustion purposes and an adequate space for servicing and air circulation around the appliance. Where the installation of the appliance will be in an unusual location special procedures may be necessary, BS 6798 gives detailed guidance on this aspect. A compartment used to enclose the appliance must be designed and constructed specifically for this purpose. An existing compartment/cupboard may be utilised provided that it is modified to suit. Details of essential features of compartment/cupboard design including airing cupboard installations are given in BS 6798. This appliance is not suitable for external installation.

3.3 GAS SUPPLY

The gas meter – as supplied by the gas supplier – must be checked to ensure that it is of adequate size to deal with the maximum rated input of all the appliances that it serves. Installation pipes must be fitted in accordance with BS 6891.
Pipe work from the meter to the appliance must be of adequate size. Pipes of a smaller size than the appliance gas inlet connection must not be used. The installation must be tested for tightness in accordance with BS6891.
If the gas supply serves more than one appliance, it must be ensured that an adequate supply is maintained to each appliance when they are in use at the same time.

3.4 FLUE SYSTEM

The terminal should be located where the dispersal of combustion products is not impeded and with due regard for the damage and discoloration that may occur to building products located nearby. The terminal must not be located in a place where it is likely to cause a nuisance (see fig. 4). In cold and/or humid weather, water vapour will condense on leaving the terminal; the effect of such pluming must be considered.
If installed less than 2m above a pavement or platform to which people have access (including balconies or flat roofs) the terminal must be protected by a guard of durable material.
The guard must be fitted centrally over the terminal. Refer to BS 5440 Part 1, when the terminal is 0.5 metres (or less) below plastic guttering or 1 metre (or less) below painted eaves.

3.5 AIR SUPPLY

The following notes are intended for general guidance only. This appliance is a room-sealed, fan-flued boiler, consequently it does not require a permanent air vent for combustion air supply. When installed in a cupboard or compartment, ventilation for cooling purposes is also not required.

3.6 WATER CIRCULATION

Detailed recommendations are given in BS 5449 Part 1 and BS 6798. The following notes are for general guidance only.

3.6.1 PIPEWORK

It is recommended that copper tubing to BS 2871 Part 1 is used in conjunction with soldered capillary joints. Where possible pipes should have a gradient to ensure air is carried naturally to air release points and that water flows naturally to drain cocks. Except where providing useful heat, pipes should be insulated to avoid heat loss and in particular to avoid the possibility of freezing. Particular attention should be paid to pipes passing through ventilated areas such as under floors, loft space and void areas.

3.6.2 AUTOMATIC BY-PASS

The appliance has a built-in automatic by-pass, consequently there is no requirement for an external by-pass, however the design of the system should be such that it prevents boiler 'cycling'.

3.6.3 DRAIN COCKS

These must be located in accessible positions to facilitate draining of the appliance and all water pipes connected to the appliance. The drain cocks must be manufactured in accordance with BS 2879.

3.6.4 AIR RELEASE POINTS

These must be positioned at the highest points in the system where air is likely to be trapped. They should be used to expel trapped air and allow complete filling of the system.

3.6.5 EXPANSION VESSEL

The appliance has an integral expansion vessel to accommodate the increased volume of water when the system is heated. It can accept up to 8 litres of expansion from within the system, generally this is sufficient, however if the system has an unusually high water content, it may be necessary to provide additional expansion capacity (see 6.18).

3.6.6 FILLING POINT

A method for initial filling of the system and replacing water lost during servicing etc. directly from the mains supply, is provided. This method of filling complies with the current Water Supply (Water Fittings) Regulations 1999 and Water Bylaws 2000 (Scotland). If an alternative location is preferred, it should be connected as detailed.

3.6.7 LOW PRESSURE SEALED SYSTEM

An alternative method of filling the system would be from an independent make-up vessel or tank mounted in a position at least 1 metre above the highest point in the system and at least 5 metres above the boiler (see fig. 5).
The cold feed from the make-up vessel or tank must be fitted with an approved non-return valve and stopcock for isolation purposes. The feed pipe should be connected to the return pipe as close to the boiler as possible.

3.6.8 FREQUENT FILLING

Frequent filling or venting of the system may be indicative of a leak. Care should be taken during the installation of the appliance to ensure all aspects of the system are capable of withstanding pressures up to at least 3 bar.

3.7 ELECTRICAL SUPPLY

The appliance is supplied for operation on 230V @ 50Hz electrical supply; it must be protected with a 3-amp fuse. The method of connection to the mains electricity supply must allow for complete isolation from the supply. The preferred method is by using a double-pole switch with a contact separation of at least 3,5mm (3° high-voltage category). The switch must only supply the appliance and its corresponding controls, i.e. time clock, room thermostat, etc. Alternatively an un-switched shuttered socket with a fused 3-pin plug both complying with BS 1363 is acceptable.

3.8 TIMBER FRAMED BUILDINGS

If the appliance is to be fitted in a timber framed building, it should be fitted in accordance with the Institute of Gas Engineers publication (IGE/UP/7) 'Guide for Gas Installations in Timber Frame Buildings'.

3.9 INHIBITORS

Vokèra recommend that an inhibitor - suitable for use with aluminium heat exchangers - is used to protect the boiler and system from the effects of corrosion and/or electrolytic action. The inhibitor must be administered in strict accordance with the manufacturers instructions*.

*Water treatment of the complete heating system - including the boiler - should be carried out in accordance with BS 7593 and the Domestic Water Treatment Association's (DWTA) code of practice.

3.10 SHOWERS

If the appliance is intended for use with a shower, the shower must be thermostatically controlled and be suitable for use with a combination boiler.

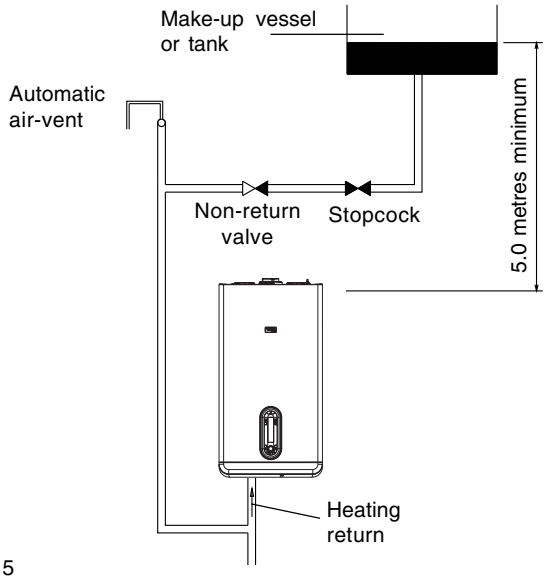

Fig. 5

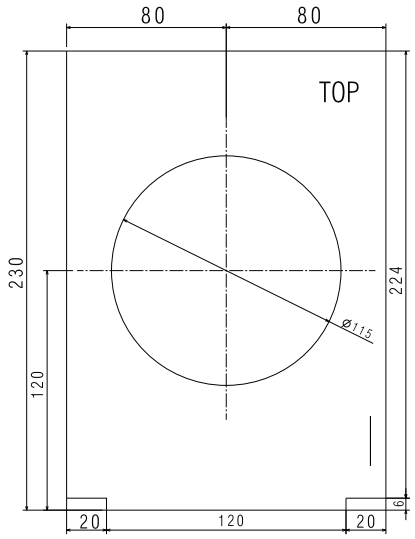

Fig. 6

Fig. 6A

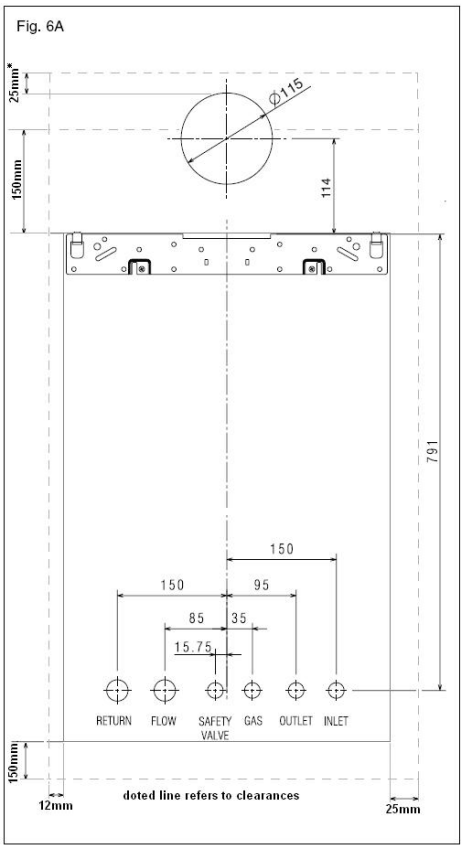

Fig. 6B

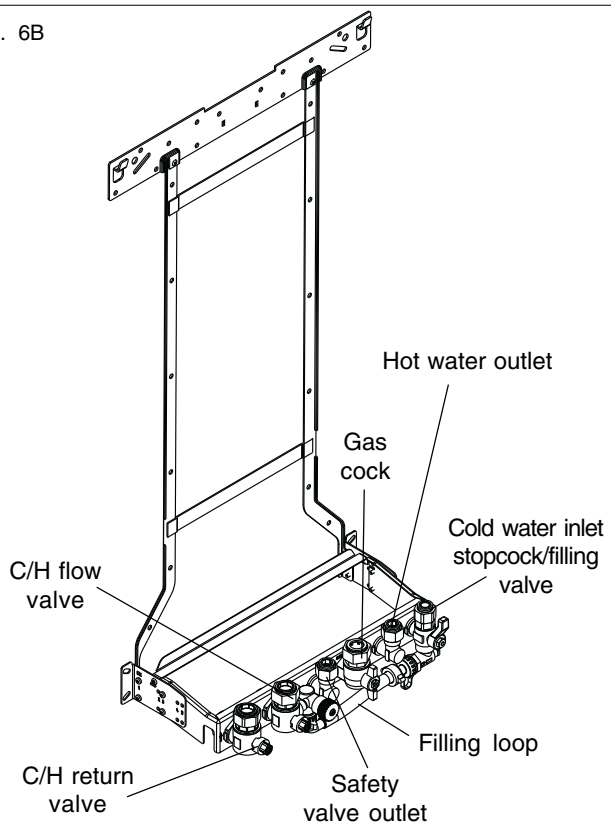

Default screws position of fixing jig: **No. 3**

SECTION 3A - GENERAL REQUIREMENTS (EIRE)

This appliance must be installed by a competent person in accordance with and defined by, the Standard Specification (Domestic Gas Installations) Declaration (I.S. 813).

3A.1 RELATED DOCUMENTS

The installation of this boiler must be in accordance with the relevant requirements of the local building regulations, the current ETCI National Rules for Electrical Installations and the bylaws of the local water undertaking. It should be in accordance also with any relevant requirements of the local and/or district authority.

3A.2 LOCATION OF APPLIANCE

The appliance may be installed in any room or internal space, although particular attention is drawn to the requirements of the current ETCI National Rules for Electrical Installations, and I.S. 813, Annex K. When an appliance is installed in a room or internal space containing a bath or shower, the appliance or any control pertaining to it must not be within reach of a person using the bath or shower. The location chosen for the appliance must permit the provision of a safe and satisfactory flue and termination. The location must also permit an adequate air supply for combustion purposes and an adequate space for servicing and air circulation around the appliance. Where the installation of the appliance will be in an unusual location special procedures may be necessary, refer to I.S. 813 for detailed guidance on this aspect.
A compartment used to enclose the appliance must be designed and constructed specifically for this purpose. An existing compartment/cupboard may be utilised provided that it is modified to suit. This appliance is not suitable for external installation.

3A.3 GAS SUPPLY

The gas meter – as supplied by the gas supplier – must be checked to ensure that it is of adequate size to deal with the maximum rated input of all the appliances that it serves. Installation pipes must be fitted in accordance with I.S. 813. Pipe work from the meter to the appliance must be of adequate size. Pipes of a smaller size than the appliance gas inlet connection must not be used. The installation must be tested for tightness in accordance with I.S. 813.
If the gas supply serves more than one appliance, it must be ensured that an adequate supply is maintained to each appliance when they are in use at the same time.

3A.4 FLUE SYSTEM

The terminal should be located where the dispersal of combustion products is not impeded and with due regard for the damage and discoloration that may occur to building products located nearby. The terminal must not be located in a place where it is likely to cause a nuisance (see I.S. 813). In cold and/or humid weather, water vapour will condense on leaving the terminal; the effect of such pluming must be considered. If installed less than 2m above a pavement or platform to which people have access (including balconies or flat roofs) the terminal must be protected by a guard of durable material. The guard must be fitted centrally over the terminal. Refer to I.S. 813, when the terminal is 0.5 metres (or less) below plastic guttering or 1 metre (or less) below painted eaves.

3A.5 AIR SUPPLY

The following notes are intended for general guidance only.
This appliance is a room-sealed, fan-flued boiler, consequently it does not require a permanent air vent for combustion air supply.
When installed in a cupboard or compartment, ventilation for cooling purposes is also not required.

3A.6 WATER CIRCULATION

Specific recommendations are given in I.S. 813. The following notes are for general guidance only.

3A.6.1 PIPEWORK

It is recommended that copper tubing be used in conjunction with soldered capillary joints. Where possible pipes should have a gradient to ensure air is carried naturally to air release points and that water flows naturally to drain cocks. Except where providing useful heat, pipes should be insulated to avoid heat loss and in particular to avoid the possibility of freezing. Particular attention should be paid to pipes passing through ventilated areas such as under floors, loft space and void areas.

3A.6.2 AUTOMATIC BY-PASS

The appliance has a built-in automatic by-pass, consequently there is no requirement for an external by-pass, however the design of the system should be such that it prevents boiler 'cycling'.

3A.6.3 DRAIN COCKS

These must be located in accessible positions to facilitate draining of the appliance and all water pipes connected to the appliance.

3A.6.4 AIR RELEASE POINTS

These must be positioned at the highest points in the system where air is likely to be trapped. They should be used to expel trapped air and allow complete filling of the system.

3A.6.5 EXPANSION VESSEL

The appliance has an integral expansion vessel to accommodate the increased volume of water when the system is heated. It can accept up to 8 litres of expansion from within the system, generally this is sufficient, however if the system has an unusually high water content, it may be necessary to provide additional expansion capacity (see 6.18).

3A.6.6 FILLING POINT

A method for initial filling of the system and replacing water lost during servicing etc. is provided. You should ensure this method of filling complies with the local water authority regulations.

3A.6.7 LOW PRESSURE SEALED SYSTEM

An alternative method of filling the system would be from an independent make-up vessel or tank mounted in a position at least 1 metre above the highest point in the system and at least 5 metres above the boiler (see fig. 5). The cold feed from the make-up vessel or tank must be fitted with an approved non-return valve and stopcock for isolation purposes. The feed pipe should be connected to the return pipe as close to the boiler as possible.

3A6.8 FREQUENT FILLING

Frequent filling or venting of the system may be indicative of a leak. Care should be taken during the installation of the appliance to ensure all aspects of the system are capable of withstanding pressures up to at least 3 bar.

3A.7 ELECTRICAL SUPPLY

The appliance is supplied for operation on 230V @ 50Hz electrical supply; it must be protected with a 3-amp fuse. The method of connection to the mains electricity supply must allow for complete isolation from the supply. The preferred method is by using a double-pole switch with a contact separation of at least 3,5 mm (3° high-voltage category). The switch must only supply the appliance and its corresponding controls, i.e. time clock, room thermostat, etc.

3A.8 TIMBER FRAMED BUILDINGS

If the appliance is to be fitted in a timber framed building, it should be fitted in accordance with I.S. 813 and local Building Regulations. The Institute of Gas Engineers publication (IGE/UP/7) 'Guide for Gas Installations in Timber Frame Buildings' gives specific advice on this type of installation.

3A.9 INHIBITORS

Vokèra recommend that an inhibitor - suitable for use with aluminium heat exchangers - is used to protect the boiler and system from the effects of corrosion and/or electrolytic action. The inhibitor must be administered in strict accordance with the manufacturers instructions*. *Water treatment of the complete heating system - including the boiler - should be carried out in accordance with I.S. 813 and the Domestic Water Treatment Association's (DWTA) code of practice.

3A.10 SHOWERS

If the appliance is intended for use with a shower, the shower must be thermostatically controlled and be suitable for use with a combination boiler.

3A.11 DECLARATION OF CONFORMITY

A Declaration of Conformity (as defined in I.S. 813) must be provided on completion of the installation. A copy of the declaration must be given to the responsible person and also to the gas supplier if required.

SECTION 4 - INSTALLATION

4.1 DELIVERY

Due to the weight of the appliance it may be necessary for two people to lift and attach the appliance to its mounting. The appliance is contained within a heavy-duty cardboard carton. Lay the carton on the floor with the writing the correct way up.

4.2 CONTENTS

Contained within the carton is:

- the boiler
- the wall bracket & fixing jig
- template
- carton template
- an accessories pack containing appliance service connections and washers
- the instruction pack containing the installation, servicing & user instructions, guarantee registration card and a 3-amp fuse.

4.3 UNPACKING

At the top of the carton pull both sides open – do not use a knife – unfold the rest of the carton from around the appliance, carefully remove all protective packaging from the appliance and lay the accessories etc. to one side. Protective gloves should be used to lift the appliance, the appliance back-frame should be used for lifting points.

4.4 PREPARATION FOR MOUNTING THE APPLIANCE

The appliance should be mounted on a smooth, vertical, non-combustible surface, which must be capable of supporting the full weight of the appliance. Care should be exercised when determining the position of the appliance with respect to hidden obstructions such as pipes, cables, etc.
When the position of the appliance has been decided – using the template supplied – carefully mark the position of the wall-mounting bracket and flue-hole (if applicable).
If you intend to run the pipe-work vertically behind the boiler, move the screws on the fixing jig from the default position (No. 3) to position No. 5. You will also require a spacer kit, part No. 435 (see 4.6).

4.5 FITTING THE FLUE

The top flue outlet permits both horizontal and vertical flue applications to be considered, alternatively, the Vokèra twin flue system can be utilised if longer flue runs are required.

4.5.1 CONCENTRIC HORIZONTAL FLUE

(For concentric vertical flue, see 4.5.2).
(For twin flue applications, see 4.5.3).
The appliance can be used with either the Vokèra condensing 60/100mm concentric flue system or the optional 80/125mm concentric flue system.

NOTE
These instructions relate **only** to the Vokèra condensing 60/100mm concentric flue system. For specific details on the installation of the 80/125mm concentric flue system please refer to the instructions supplied. The appliance flue outlet elbow can be rotated through 360º on its vertical axis. In addition the flue may be extended from the outlet elbow in the horizontal plane (see 2.9). A reduction must also be made to the maximum length (see table below) when additional bends are used.

Reduction for additional bends

Bend	Reduction in maximum flue length for each bend
45º bend	0.5 metre
90º bend	1.0 metre

Horizontal flue terminals and accessories

Part No.	Description	Length
29450120	Horizontal flue kit	900mm
29450121	Telescopic flue kit	350/530mm
522	Plume management kit	1370mm
29450123	90-degree bend	N/A
29450124	45-degree bends (pair)	N/A
29450125	500mm extension	500mm
29450126	1000mm extension	1000mm
29450127	2000m extension	2000mm
29450128	Telescopic extension	350/730mm
529	Wall bracket pack (5)	208mm

Using the template provided, mark and drill a 115mm level hole for the passage of the flue pipe.
Note that if extending the flue, the hole should be drilled at a higher position taking into account the 1-3 degree fall back of extension pipes (fig.7A). The fixing holes for the wall-mounting bracket/fixing jig should now be drilled and plugged, an appropriate type and quantity of fixing should beused to ensure that the bracket is mounted securely. Once the bracket has been secured to the wall, mount the appliance onto the bracket.

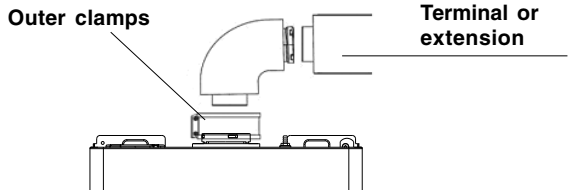

Fig. 7

FITTING THE HORIZONTAL FLUE KIT
Carefully measure the distance from the centre of the appliance flue outlet to the edge of the finished outside wall (dimension X). Add 65mm to dimension X to give you Dimension Y (see fig 7B). Measure dimension Y from the terminal end of the concentric flue pipe and cut off the excess ensuring any burrs are removed. Pass the concentric flue pipe through the previously drilled hole. Fit the flue bend to the boiler flue outlet and insert the concentric flue pipe into the flue bend ensuring the correct seal is made. Using the clamp, gasket, and screws supplied, secure the flue bend to the appliance flue spigot.

NOTE
Fit the internal (white) trim to the flue assembly prior to connecting the flue pipe to the bend.
You must ensure that the entire flue system is properly supported and connected. Seal the flue assembly to the wall using cement or a suitable alternative that will provide satisfactory weatherproofing. The exterior trim can now be fitted.

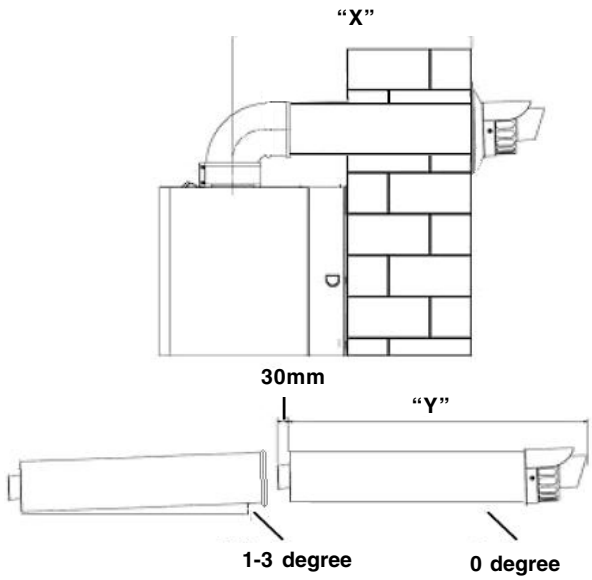

Fig. 7A

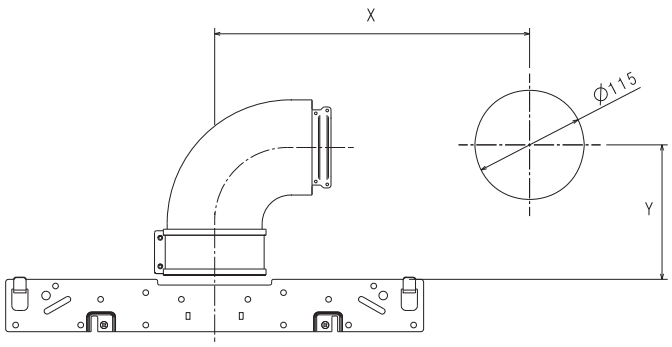

X= Measured distance from flue spigot to hole drilled	Y= Measured hight from bracket to centre of hole drilled	
	min	max
X= terminal only	114mm	114mm
X= 2m	132mm	166mm
X= 3m	149mm	219mm
X= 3.85 m	164mm	265mm

Fig. 7B

EXTENDING THE FLUE

Connect the bend – supplied with the terminal kit – to the top of the boiler using clamp (supplied) see fig. 7. The additional bends & extensions have push-fit connections, care should be taken to ensure that the correct seal is made when assembling the flue system. Connect the required number of flue extensions or bends (up to the maximum equivalent flue length) to the flue terminal (see fig. 7-8). The flue system should have a minimum of 1º; maximum of 3º rise from the boiler to outside, to ensure any condense fluid that forms, is allowed to drain back to the appliance.

NOTE

When cutting an extension to the required length, you must ensure that the excess is cut from the plain end of the extension (see fig. 7-8). Remove any burrs, and check that all seals are located properly. You must ensure that the entire flue system is properly supported and connected. Seal the flue assembly to the wall using cement or a suitable alternative that will provide satisfactory weatherproofing. The interior and exterior trim can now be fitted.

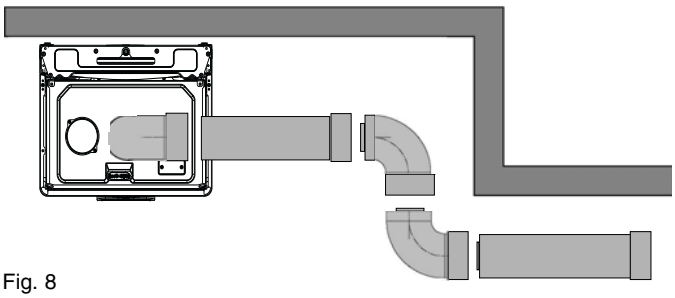

Fig. 8

4.5.2 CONCENTRIC VERTICAL FLUE

The appliance can be used with either the Vokèra condensing 60/100mm concentric flue system or the optional 80/125mm concentric flue system.

NOTE

These instructions relate **only** to the Vokèra condensing 60/100mm concentric flue system. For specific details on the installation of the 80/125mm concentric flue system please refer to the instructions supplied.

The vertical flue terminal can be connected directly to the appliance flue outlet. Alternatively, an extension or bend can be connected to the appliance flue outlet if desired, however if additional bends are fitted, a reduction must be made to the maximum flue length (see table below).

Reduction for bends

Bend	Reduction in maximum flue length for each bend
45º bend	0.5 metre
90º bend	1.0 metre

Vertical flue terminal and accessories

Part No.	Description	Length
29450122	Vertical flue terminal	1000mm
531	Pitched roof flashing plate	N/A
532	Flat roof flashing plate	N/A
29450123	90-degree bend	N/A
29450124	45-degree bends (pair)	N/A
29450125	500mm extension	500mm
29450126	1000mm extension	1000mm
29450127	2000mm extension	2000mm
29450128	Telescopic extension	350/730mm
529	Wall bracket pack (5)	208mm

Using the dimensions given in fig. 7A as a reference, mark and cut a 125mm hole in the ceiling and/or roof.

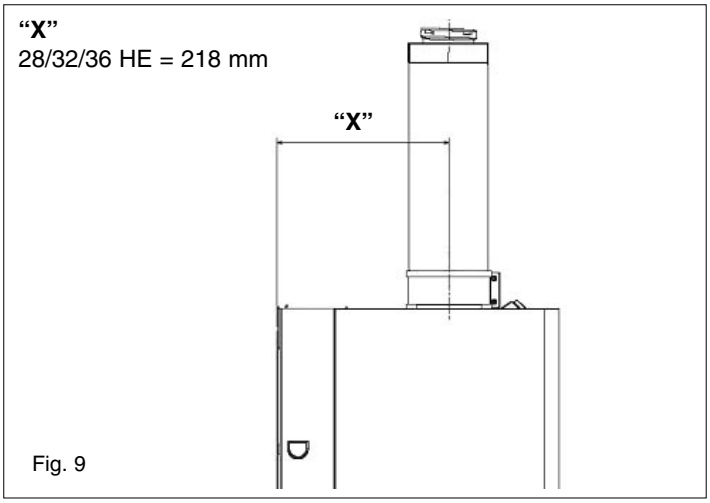

Fig. 9

Fit the appropriate flashing plate to the roof and insert the vertical flue terminal through the flashing plate from the outside, ensuring that the collar on the flue terminal fits over the flashing.

The fixing holes for the wall-mounting bracket should now be drilled and plugged, an 'appropriate type and quantity of fixing should be used to ensure that the bracket is mounted securely. Once the bracket has been secured to the wall, mount the appliance onto the bracket.

IMPORTANT

The vertical flue terminal is 1.0 metre in length and cannot be cut; therefore it may be necessary to adjust the height of the appliance to suit or use a suitable extension.

Connect the vertical flue assembly to the boiler flue spigot using the 100mm clip, gasket & screws (supplied), ensuring the correct seal is made. The flue support bracket (supplied with the vertical flue kit) can now be fitted.

If the vertical flue requires extension/s or additional bend/s, connect the required number of flue extensions or bends (up to the maximum equivalent flue length) between the boiler and vertical flue assembly. Ensure that any horizontal sections of the flue system have a minimum 1º; maximum 3º fall back to the boiler (1º = 17mm per 1000mm).

NOTE

When cutting an extension to the required length, you must ensure that the excess is cut from the plain end of the extension. Remove any burrs, and check that any seals are located properly.

You must ensure that the entire flue system is properly supported and connected.

4.5.3 TWIN FLUE SYSTEM

The Vokèra twin flue system enables greater flue distances to be achieved than that of a concentric flue system. It can be used for horizontal or vertical applications, however the twin flue system must be converted to the dedicated concentric flue kit for termination. It is essential that the installation of the twin flue system be carried out in strict accordance with these instructions.

GUIDANCE NOTES ON TWIN FLUE INSTALLATION

- The flue must have a have a minimum 1º; maximum 3º (1º = 17mm per 1000mm) fall back to the appliance to allow any condensate that may form in the flue system to drain via the condensate drain.

Consideration must also be given to the fact that there is the possibility of a small amount of condensate dripping from the terminal.

- Ensure that the entire flue system is adequately supported, use at least one bracket for each extension.
- The entire flue system must be adequately insulated to maintain heat within the flue system thereby reducing the possibility of condensate production.
- As the exhaust outlet pipe can reach very high temperatures it must be protected to prevent persons touching the hot surface.
- The condensate drain pipe must be connected in accordance with building regulations.

Reduction for bends

Bend	Reduction in maximum flue length for each bend
45° bend	1.0 metre
90° bend	1.0 metre

Twin flue accessories

Part No.	Description	Length
0225805	Horizontal flue terminal	1.0 metre
0225810	Vertical flue terminal	1.0 metre
359	Twin adapter kit	N/A
531	Pitched roof flashing plate	N/A
532	Flat roof flashing plate	N/A
0225815	Condensate drain kit	N/A
0225820	0.25m extension (pair)	250mm
0225825	0.5m extension (pair)	500mm
0225830	1.0m extension (pair)	1000mm
0225835	2.0m extension (pair)	2000mm
0225840	45° bend (pair)	N/A
0225845	90° bend (pair)	N/A
0225850	Twin bracket (5)	N/A
0225855	Single bracket (5)	N/A

MOUNTING THE BOILER

The fixing holes for the wall-mounting bracket should now be drilled and plugged, an appropriate type and quantity of fixing should be used to ensure that the bracket is mounted securely. Once the bracket has been secured to the wall, mount the appliance onto the bracket.

INSTALLATION OF TWIN ADAPTOR KIT (fig. 10 & 11)

- Insert the exhaust connection manifold (A) onto the appliance flue outlet.
- Remove the blanking plate (located to the left of the appliance flue outlet) and – using the same screws – install the air inlet plate (B).
- Using the hole in the exhaust connection manifold as a guide, drill a 3mm hole in the appliance flue spigot and secure the exhaust manifold connection to the flue spigot using the screw provided (C).
- Using the two holes in the air inlet plate as a guide, drill a 3mm hole in each and secure the air inlet pipe/bend using the screws provided.

The twin flue pipes extensions and accessories can now be installed by pushing together (the plain end of each extension or bend should be pushed approximately 50mm into the female socket of the previous piece).

Fig. 10

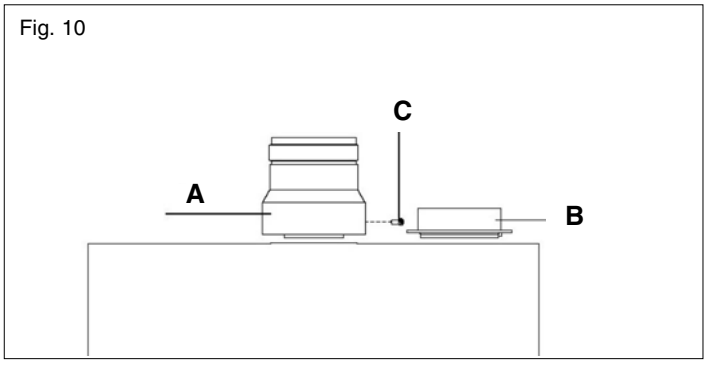

Fig. 11

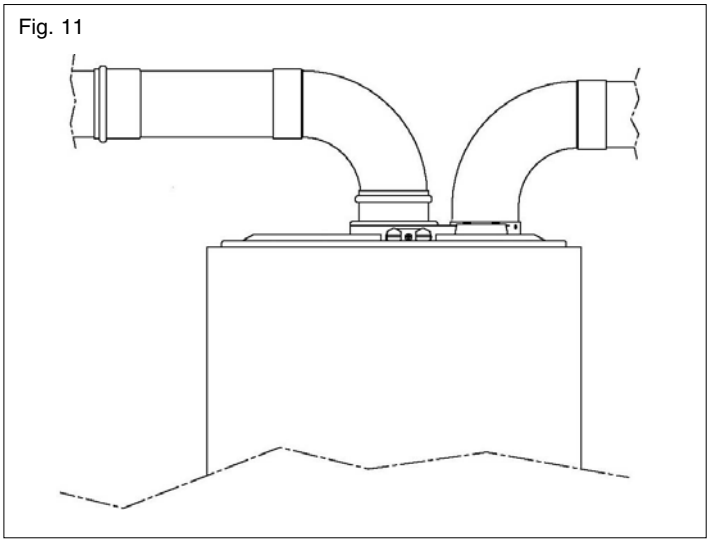

HORIZONTAL TERMINATION (fig. 12)

The twin flue system must be converted to the dedicated concentric flue kit for termination.

- The horizontal terminal is supplied with a built-in converter box and cannot be shortened.
- A 130mm hole is required for the passage of the concentric terminal through the wall.
- The air inlet pipe must always be level with or below, that of the exhaust pipe.

Depending on site conditions it may be preferable to install the terminal assembly prior to fitting the twin flue pipes.

Mark and drill a level 130mm hole for the passage of the horizontal flue terminal. Insert the terminal assembly into the flue hole.
Push-fit the twin flue pipes onto the concentric to twin converter box ensuring that the exhaust pipe connects to the exhaust connection on the concentric to twin converter.
If necessary cut the plain ends (male) of the twin flue pipes to allow connection to the concentric to twin converter.

NOTE

Before cutting twin flue pipes ensure allowances have been made for connection onto the previous piece and onto the concentric to twin converter. The last twin flue pipes must be pushed 50mm onto the male spigots of the concentric to twin converter.

NOTE

Seal the flue terminal assembly to the wall using cement or a suitable alternative that will provide satisfactory weatherproofing. The interior and exterior trim can now be fitted.

VERTICAL TERMINATION (fig. 13)

The twin flue system must be converted to the dedicated concentric flue kit for termination.

- The vertical terminal is supplied with a built-in converter box and cannot be shortened.
- A 130mm hole is required for the passage of the concentric terminal through the ceiling and/or roof.

Depending on site conditions it may be preferable to install the terminal assembly prior to fitting the twin flue pipes.
Fit the appropriate flashing plate to the roof and insert the vertical flue terminal through the flashing plate from the outside, ensuring that the collar on the flue terminal fits over the flashing.
Push-fit the twin flue pipes onto the concentric to twin converter ensuring that the exhaust pipe connects to the exhaust connection on the concentric to twin converter.
If necessary cut the plain ends (male) of the twin flue pipes to allow connection to the concentric to twin converter.

NOTE

- Before cutting twin flue pipes ensure allowances have been made for connection onto the previous piece and onto the concentric to twin converter. The last twin flue pipes must be pushed 50mm onto the male spigots of the concentric to twin converter.
- You must ensure that the entire flue system is properly supported and connected.
- Ensure that any horizontal sections of pipe have a 1° fall towards the appliance (17mm per 1000mm).

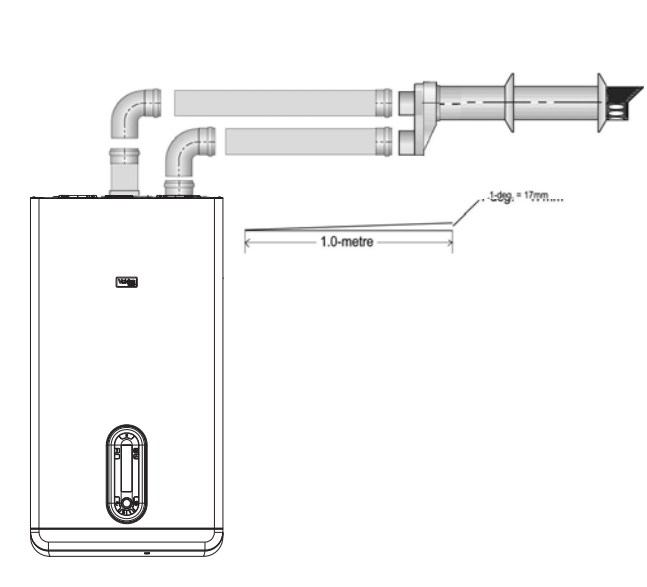

Fig. 12

4.6 CONNECTING THE GAS AND WATER

IMPORTANT - REAR SPACER KIT

If you intend to run the pipework vertically behind the appliance, it will be necessary to use the rear spacer kit (part code 435). It will also be necessary to adjust the pitch of the fixing jig to compensate for the increase in the depth of the appliance. The appliance is supplied with a fixing jig that includes service valves (fig. 14). The service valves are of the compression type. The accessories pack contains sealing washers etc, for use with the service valves.

When connecting pipe work to the valves, tighten the compression end first then insert the sealing washers before tightening the valve to the appliance.

The appliance is supplied with an accessory pack that includes service valves.

The service valves are for welding. The accessory pack contains sealing washers' etc, for use with the service valves.

NOTE

It will be necessary to hold the valve with one spanner whilst tightening with another

4.6.1 GAS (fig. 14)

The appliance is supplied with a 15mm service valve, connect a 15mm pipe to the inlet of the valve and tighten both nuts.

NOTE

It will be necessary to calculate the diameter of the gas supply pipe to ensure the appliance has an adequate supply of gas.

4.6.2 FLOW & RETURN (fig. 14)

The appliance is supplied with 22mm service valves for the flow and return connections, connect a 22mm pipe to the inlet of each valve and tighten both nuts.

NOTE

Depending on system requirements, it may necessary to increase the size of the flow & return pipe work after the service valve connections.

4.6.3 COLD WATER INLET (fig. 14)

The appliance is supplied with a 15mm combined stopcock and double check-valve, connect a 15mm pipe to the inlet of the stopcock and tighten both nuts.

4.6.4 HOT WATER OUTLET (fig. 14)

The appliance is supplied with a 15mm outlet connection, connect a 15mm pipe to the outlet connection and tighten both nuts.

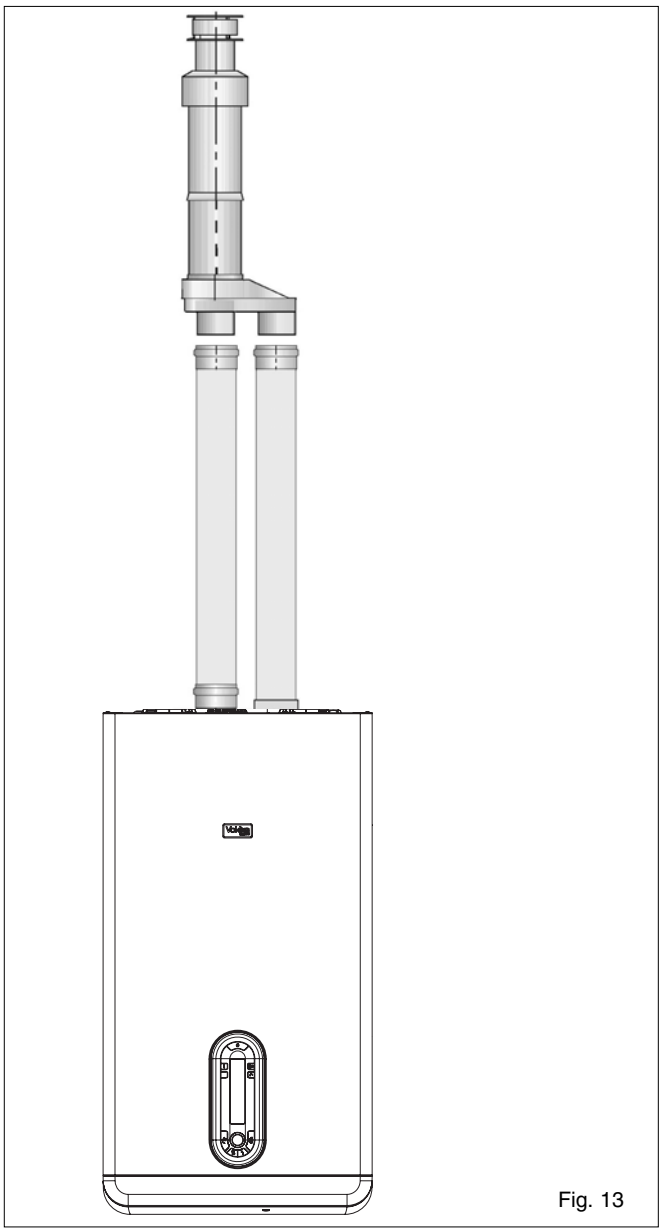

Fig. 13

Fig. 14

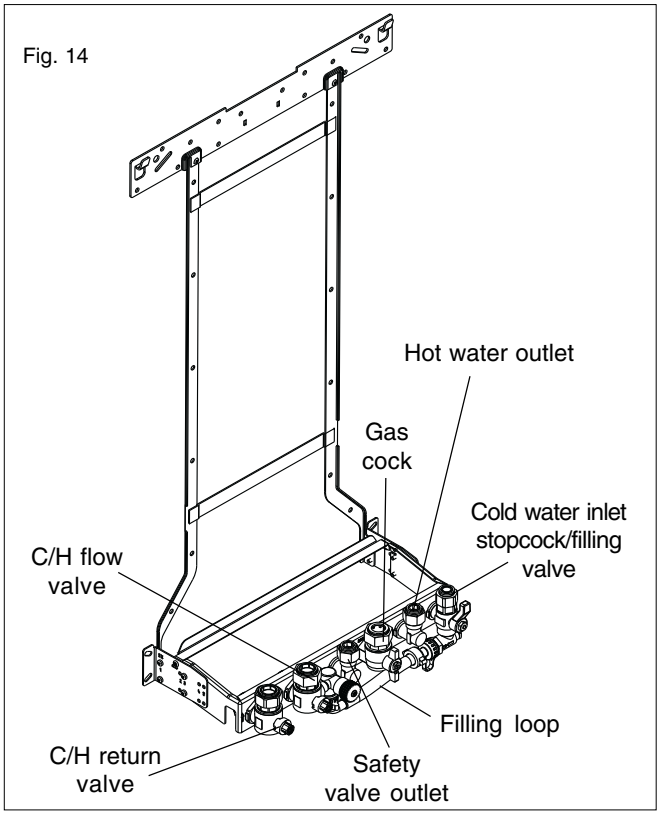

4.6.5 SAFETY VALVE (fig. 14)

Connect a discharge pipe to the fixing jig connection and tighten. The discharge pipe must have a continuous fall away from the appliance to outside and allow any water to drain away thereby eliminating the possibility of freezing. The discharge pipe must terminate in a position where any water – possibly boiling – discharges safely without causing damage or injury, but is still visible.

4.6.6 CONDENSE PIPE

During normal operation the boiler produces condense which is collected in a trap located in the lower part of the boiler. A flexible pipe (condense outlet pipe) is connected to the outlet of the trap. The flexible pipe must be connected to a plastic waste pipe only. The plastic waste pipe must have a minimum of a 3º fall towards the drain. Any external run of pipe should be insulated to prevent the risk of freezing.

CONNECTING THE CONDENSATE OUTLET

Gently pull the condense outlet pipe down from its location inside the boiler until it protrudes from the underside of the boiler. Connect a suitable plastic (not copper) pipe (no less than 20mm diameter) to the outlet pipe and ensure it discharges in accordance with building regulations or other rules in force (see fig. 15A for examples).

4.6.7 CONNECTING THE CONDENSATE OUTLET

Gently pull the condense outlet pipe down from its location inside the boiler until approximately 100mm protrudes from the underside of the boiler. Connect a suitable plastic (not copper) pipe (no less than 20mm diameter) to the outlet pipe and ensure it discharges in accordance with building regulations or other rules in force.

4.7 ELECTRICAL CONNECTIONS

The electrical supply must be as specified in section 3/3A. A qualified electrician should connect the electrical supply to the appliance. If controls – external to the appliance – are required, a competent person must undertake the design of any external electrical circuits, please refer to section 8 for detailed instructions. ANY EXTERNAL CONTROL OR WIRING MUST BE SERVED FROM THE SAME ISOLATOR AS THAT OF THE APPLIANCE.

The supply cable from the isolator to the appliance must be 3-core flexible sized 0.75mm to BS 6500 or equivalent. Wiring to the appliance must be rated for operation in contact with surfaces up to 90 °C.

4.7.1 CASING REMOVAL (fig. 15)

Remove transit screws **C** once the boiler has been mounted on the wall.

To gain internal access to the appliance you must first remove the casing, proceed as outlined below:

- locate and remove the screw **A**;
- remove the cover from the underside of the appliance casing;
- locate and remove the 2 screws **B** located at the Left & Right of the underside of the casing;
- lift the casing upward to disengage it from the top locating hooks and then remove;
- store the casing and screws safely until required. Re-fit in the reverse order.

4.7.2 APPLIANCE TERMINAL BLOCK

The appliance terminal block is located on the rear of the control fascia. Remove the casing as described in 4.7.1. Lift the control fascia upward and lower it. Locate the terminal block covers (see fig. 16).

NOTE

The appliance comes with a factory fitted link to allow basic operation of the boiler via the mode selector switch. If it is anticipated that external controls will be required please refer to the wiring diagrams in section 8 for more detailed information.

4.7.3 CONNECTING THE MAINS (230V) INPUT (see fig. 17)

Locate and remove the screw securing the right terminal block cover (230V). Pass the cable through the cable anchorage point. Connect the supply cable wires (LIVE, and NEUTRAL) to their corresponding terminals on the appliance terminal block. Connect the EARTH wire to the EARTH block (see fig. 17) ensuring that it's left slightly longer that the others, this will prevent strain on the EARTH wire should the cable become taut.

Do not remove the link wire unless additional external controls are to be fitted (see section 8). The securing screw on the cable anchorage should now be tightened. This must be done before the control fascia is re-fitted in the upright position. The appliance casing, screws, and lower cover can now be re-fitted.

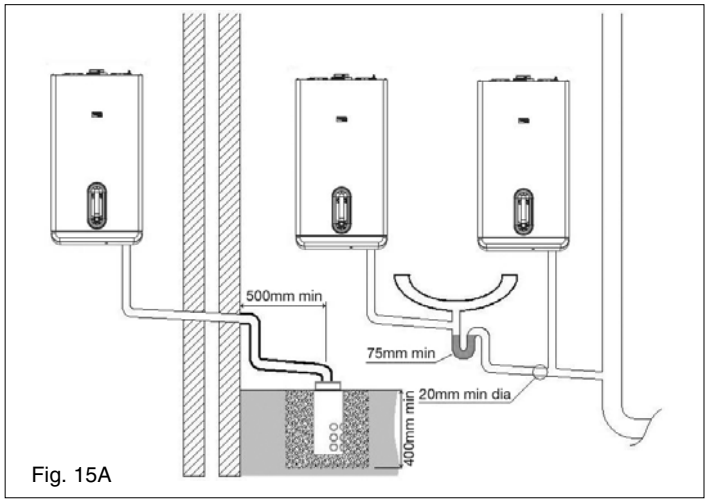

Fig. 15A

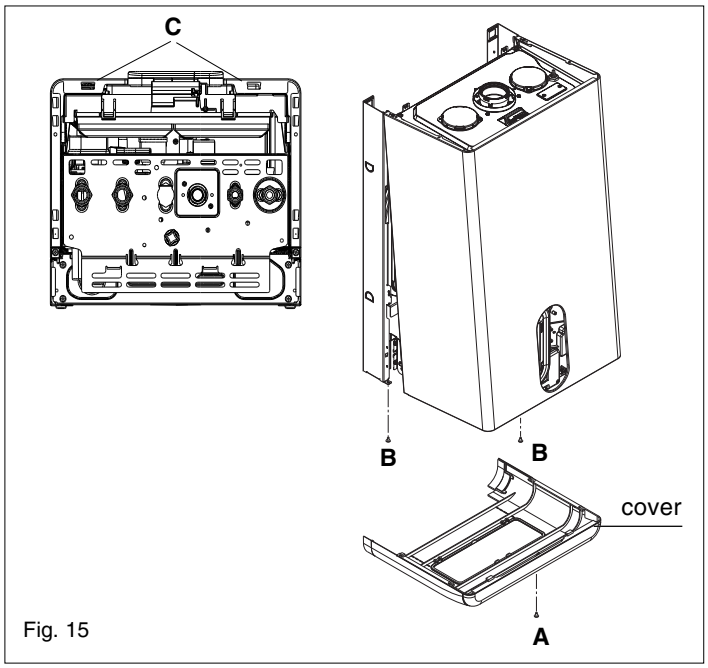

Fig. 15

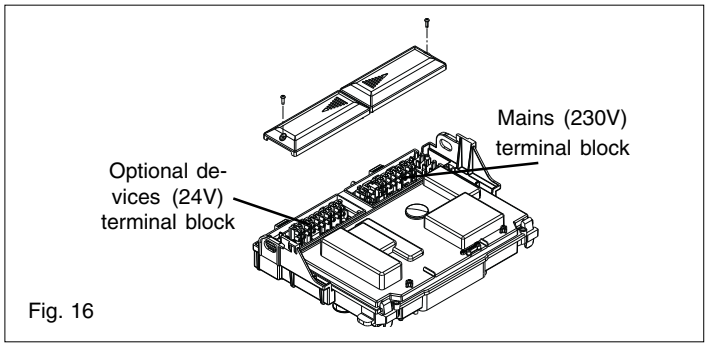

Fig. 16

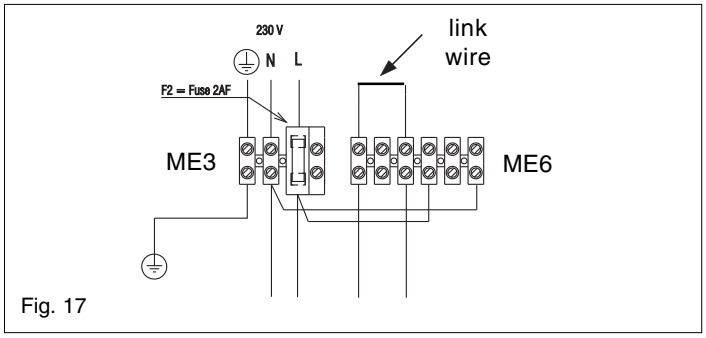

Fig. 17

SECTION 5 - COMMISSIONING

5.1 GAS SUPPLY INSTALLATION

Inspect the entire installation including the gas meter, test for tightness and purge. Refer to BS 6891 for specific instruction.

5.2 THE HEATING SYSTEM

The appliance contains components that may become damaged or rendered inoperable by oils and/or debris that are residual from the installation of the system, consequently it is essential that the system be flushed in accordance with the following instructions.

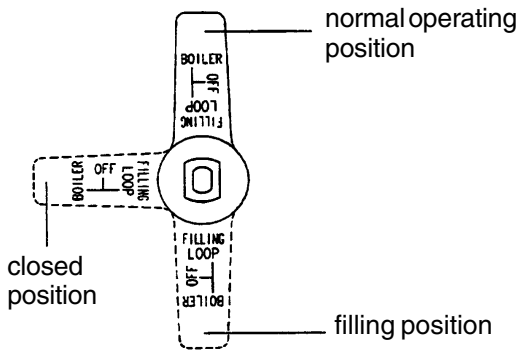

Fig. 18

5.3 INITIAL FILLING OF THE SYSTEM

Ensure both flow and return service valves are open, remove appliance casing as described in 4.7.1, identify the automatic air release valves (AAV) and loosen the dust cap/s by turning the cap anti-clockwise one full turn.

IMPORTANT, THERE ARE NO MANUAL AIR RELEASE VALVES LOCATED ON THE APPLIANCE. Ensure all manual air release valves located on the heating system are closed.

Connect the filling loop as shown in fig. 3, slowly proceed to fill the system by firstly opening the inlet valve connected to the flow valve, and then turning the lever on the combined stopcock and check valve, to the filling position (see fig. 18). As water enters the system the pressure gauge will begin to rise. Once the gauge has reached 1 BAR close both valves and begin venting all manual air release valves, starting at the lowest first. It may be necessary to go back and top-up the pressure until the entire system has been filled. Inspect the system for water tightness, rectifying any leaks.

5.4 INITIAL FLUSHING OF THE SYSTEM

The whole of the heating system must be flushed both cold and hot as detailed in 5.8. Open all radiator or heating valves and the appliance flow & return service valve. Drain the boiler and system from the lowest points. Open the drain valve full bore to remove any installation debris from the boiler prior to lighting. Refill the boiler and heating system as described in 5.3.

5.5 FILLING THE HOT WATER SYSTEM

Close all hot water outlets, turn appliance stopcock to the normal operating position (fig. 18), slowly open each outlet until air has been expelled and clear water is discharged.
Check pipe-work etc. for water tightness.

5.6 PRE-OPERATION CHECKS

Before attempting the initial lighting of the appliance, the following checks must be carried out:

- ensure all gas service valves from the meter to the appliance are open and the supply pipe has been properly purged;
- ensure the proper electrical checks have been carried out, (see 7.8) particularly continuity, polarity, and resistance to earth;
- ensure the 3 AMP fuse – supplied with the appliance – has been fitted;
- ensure the system has been filled, vented, and the pressure set to 1 BAR;
- ensure the flue system has been fitted properly and in accordance with the instructions;
- ensure all appliance service valves are open.

5.7 INITIAL LIGHTING

Ensure the electrical supply to the appliance is switched on. Press the ON/OFF switch to switch the appliance ON (indicated by active display), ensure any external controls are switched to an 'ON' position and are calling for heat.

After being powered, the boiler begins an automatic vent cycle lasting approximately 2 minutes. The display indicates "sf" and the "function selection indicators" light up in sequence. Press the MODE button to interrupt the automatic vent cycle.

Press the heating button, the appliance will now operate in the *Winter* mode as described in 1.2. Should the appliance fail to ignite, refer to 5.6 and/or section 7 (mode of operation, parameter setting, & faultfinding).

5.7.1 CHECKING GAS PRESSURE AND COMBUSTION ANALYSIS

The appliance is factory set and requires no additional adjustment once installed.However to satisfy the requirements of GSIUR 26/9 (I.S. 813 ROI), it will be necessary togas rate the appliance using the gas meter that serves the appliance.If the installation does not include a gas meter (for example LPG) and there are nomeans by which to calculate the gas rate, then a combustion analysis test must becarried out in accordance with BS 7967 (UK) to ensure the appliance is left workingsafely and correctly.Additionally, if the gas valve has been adjusted, replaced, or the appliance has beenconverted for use with another gas type, then it becomes necessary to carry out acombustion analysis/check to ensure that correct combustion is occurring.If there are no means to gas rate the appliance and/or carry out a combustion analysischeck, then it will not be possible to complete the commissioning procedure. Details on how to carry out the combustion analysis can be found in section 7.

IMPORTANT

It's imperative that a sufficient dynamic – gas – pressure is maintained at all times.Should the dynamic gas pressure fall below an acceptable level, the appliance maymalfunction or sustain damage

5.8 FINAL FLUSHING OF THE HEATING SYSTEM

The system shall be flushed in accordance with BS 7593. Should a cleanser be used, it must be suitable for Copper and Aluminium heat exchangers. It shall be from a reputable manufacturer and shall be administered in strict accordance with the manufacturers' instructions and the DWTA code of practice.

NOTE

Chemicals used to cleanse the system and/or inhibit corrosion must be pH neutral, i.e. they should ensure that the level of the pH in the system water remains neutral.
Premature failure of certain components can occur if the level of pH in the system water is out-with normal levels.

5.8.1 INHIBITORS

See Section 3 "General Requirements".

5.9 SETTING THE BOILER OPERATING TEMPERATURE

The flow outlet temperature can be adjusted between 39 °C - 80 °C via the "Heating temperature adjustment button" (see fig.2).

5.9.1 SETTING THE DOMESTIC HOT WATER TEMPERATURE

The DHW outlet temperature can be adjusted between 35 °C - 60 °C via the "DHW temperature adjustment button" (see fig. 2).

5.9.2 INFORMATION MODE

By pressing the i key, the InFO word appears on display. By turning the selector A, the display shows, one by one, the information described below.

Info list (fig. 19)

Info 1 displays the external temperature recorded by the probe, only if an external probe is connected

Info 2 displays the system pressure, accompanied by the filling symbol

Info 3 displays the set heating temperature
Info 4 displays the set domestic hot water temperature.

If you don't make any selection within 10 seconds, the boiler automatically exits the function.

5.9.3 INFORMATION MODE SERVICE

It is possible to display information that can be helpful for the Service Engineer.
Press for 10 seconds the button i: the INF2 will be displayed.
Every pressing corresponds to a different information.

5.9.4 ADJUSTING APPLIANCE PARAMETERS

The appliance is delivered with pre-set parameters. Some parameters can be changed or adjusted if required. For further details, please refer to section 7.

5.10 SETTING THE SYSTEM DESIGN PRESSURE

The design pressure should be a minimum of 0.5 BAR and a maximum of 1.5 BAR.
The actual reading should ideally be 1 BAR plus the equivalent height in metres (0.1 BAR = 1 metre) to the highest point in the system above the base of the appliance (up to the maximum of 1.5 BAR total).
N.B. The safety valve is set to lift at 3 BAR/30 metres/45 psig.
To lower the system pressure to the required value, drain off some water from the appliance drain valve until the required figure registers on the pressure gauge (see fig. 1).

Lista INF2

Step	Description	Unit
01	Temperature at flow sensor	°C
02	Temperature at return sensor	°C
03	Temperature at hot water outlet sensor	°C
04	Unused	
05	Unused	
06	Unused	
07	Flow meter speed	lt/min
08	Fan speed/100	rpm
10-17	Historical alarms	
18	Time metering cleaning heat exchanger	

Fig. 19

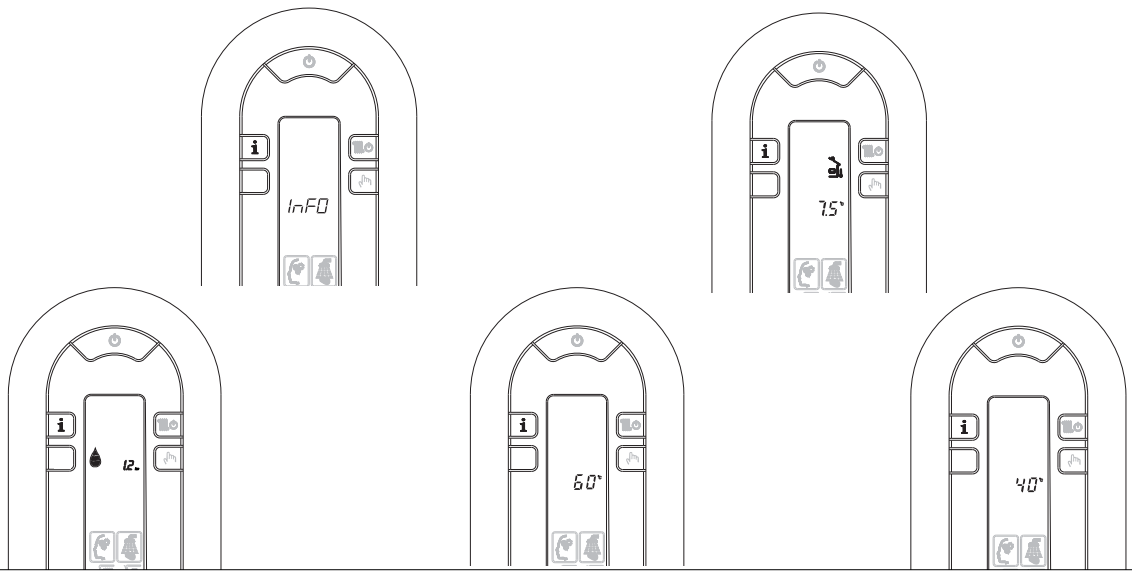

5.11 REGULATING THE HOT WATER

The appliance is fitted with a flow rate restrictor that limits the maximum flow rate that can be drawn through the appliance.
The restrictor eliminates the need to manually adjust the DHW flow rate. However if it is felt necessary to further increase or decrease the available flow rate, spare restrictors are included in the accessory pack.
The spare flow rate restrictors can be fitted to either increase or decrease the maximum flow rate. The tables overleaf denote the size of restrictor fitted and the spare restrictors supplied in the accessory pack. Each restrictor is colour-coded to enable identification.

5.11.1 CHANGING THE FLOW RESTRICTOR

Refer to 6.17 for detailed instruction on changing the flow restrictor.

5.11.2 REGULATING THE CENTRAL HEATING SYSTEM

Linea ONE

13-litre (olive)	14-litre (pink)	15-litre (green)
Spare	**Fitted**	Spare

Fully open all radiator and circuit valves and run the appliance for both heating and hot water until heated water is circulating. If conditions are warm remove any thermostatic heads. Adjust radiator return valves and any branch circuit return valves until the individual return temperatures are correct and are approximately equal.

5.12 FINAL CHECKS

- ENSURE ALL TEST NIPPLES ON THE APPLIANCE GAS VALVE ARE TIGHT AND CHECKED FOR TIGHTNESS.
- ENSURE THE APPLIANCE FLUE SYSTEM IS FITTED CORRECTLY AND IS PROPERLY SECURED.
- ENSURE ALL PIPE WORK IS RE-CHECKED FOR TIGHTNESS.
- RE-FIT APPLIANCE CASING.
- COMPLETE BENCHMARK CHECKLIST.

FOR UK ONLY

Complete details of the boiler, controls, installation and commissioning in the Benchmark checklist at the back of this book. It is important that the Benchmark checklist is correctly completed and handed to the user. Failure to install and commission the appliance to the manufacturers instructions may invalidate the warranty.

5.13 INSTRUCTING THE USER

Hand over all documentation supplied with this appliance – including these instructions – and explain the importance of keeping them in a safe place.
Explain to the user how to isolate the appliance from the gas, water and electricity supplies, and the locations of all drain points.
Show the user how to operate the appliance and any associated controls correctly.
Show the user the location of the filling valve and how to top-up the system pressure correctly and show the location of all manual air release points.
Explain to the user how to turn off the appliance for both long and short periods and advise on the necessary precautions to prevent frost damage.
Explain to the user that for continued safe and efficient operation, the appliance must be serviced annually by a competent person.

IMPORTANT

To validate the appliance warranty, it's necessary to register the appliance details with us. The warranty can be registered in several ways:

- by completing the warranty registration card and posting to us using the pre-paid envelope supplied
- online at: vokera.co.uk
- for UK residents by calling: 0844 391 0999
- for ROI residents by calling: 1850 221121.

6.1 GENERAL

To ensure the continued safe and efficient operation of the appliance, it is recommended that it is checked and serviced at regular intervals.

To ensure correct and safe operation of the appliance, it is essential that any worn or failed component be replaced only with a **genuine Vokera spare part**. It should be remembered that although certain generic components may look similar, they will be specific to an individual appliance or product range. Use of non-genuine Vokera spare parts could invalidate your warranty and may pose a potential safety hazard. The frequency of servicing will depend upon the particular installation conditions, but in general, once per year should be sufficient. It is the law that any servicing work is carried out by competent person such as a Vokera engineer, an approved service agent, British Gas, GAS SAFE registered personnel or other suitably qualified personnel.

The following instructions apply to the appliance and its controls, but it should be remembered that the central heating and the domestic hot water systems would also require attention from time to time.

6.2 ROUTINE ANNUAL SERVICING

- Check the operation of the appliance and ensure it functions as described in section 7.
- Compare the performance of the appliance with its design specification. The cause of any noticeable deterioration should be identified and rectified without delay.
- Thoroughly inspect the appliance for signs of damage or deterioration especially the flue system and the electrical apparatus.
- Check and adjust – if necessary – all burner pressure settings (see 7.4).
- Check and adjust – if necessary – the system design pressure (see 5.10).
- Carry out an analysis of the flue gases (see 7.5), and visually check the condition of the entire flue assembly.
- Compare the results with the appliance design specification. Any deterioration in performance must be identified and rectified without delay.
- Check that the burner and main heat exchanger are clean and free from any debris or obstruction.
- Check and clean – if necessary – the condense trap to ensure correct operation.

6.3 REPLACEMENT OF COMPONENTS

Although it is anticipated that this appliance will give years of reliable, trouble free service, the life span of components will be determined by factors such as operating conditions and usage. Should the appliance develop a fault, the fault finding section will assist in determining which component is malfunctioning.

6.4 COMPONENT REMOVAL PROCEDURE

To remove a component, access to the interior of the appliance is essential. Isolate the appliance from the electrical supply and remove the fuse. And when necessary, close all service valves on the appliance, remove the appliance casing as described in section 4.7.1 and drain the water content from the appliance via the drain valve. Ensure some water absorbent cloths are available to catch any residual water that may drip from the appliance or removed component. Undertake a complete commissioning check as detailed in section 5, after replacing any component. **ALWAYS TEST FOR GAS TIGHTNESS IF ANY GAS CARRYING COMPONENTS HAVE BEEN REMOVED OR DISTURBED.**

6.4.1 AIR BOX FRONT COVER REMOVAL (fig. 20)

Locate the two clips and remove air box front cover. If necessary to remove the air box side cover, locate and remove the 4 screws.

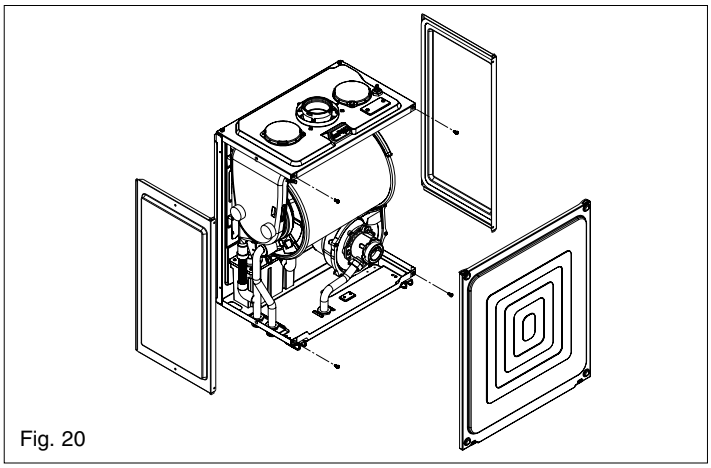

Fig. 20

6.5 PUMP ASSEMBLY (fig. 21)

Carry out component removal procedure as described in 6.4. Locate and remove the 2 securing screws **(A)** at the rear of the pump assembly. Disconnect the flow pipe **(B)** from the combustion chamber connection, slacken the pipe at the hydraulic assembly and swing/rotate clear of the pump assembly. Disconnect and remove the pump outlet pipe **(C)** from the pump assembly/ combustion chamber connection. Remove the expansion pipe locking pin from the top of the pump assembly and withdraw the flexible pipe **(D)**. Disconnect the electrical wiring from the pump's electrical connection point **(E)**. Remove locking pin **(F)** from pump base and lift pump assembly clear of the hydraulic manifold.

The pump assembly can now be removed from the appliance. Replace carefully in the reverse order.

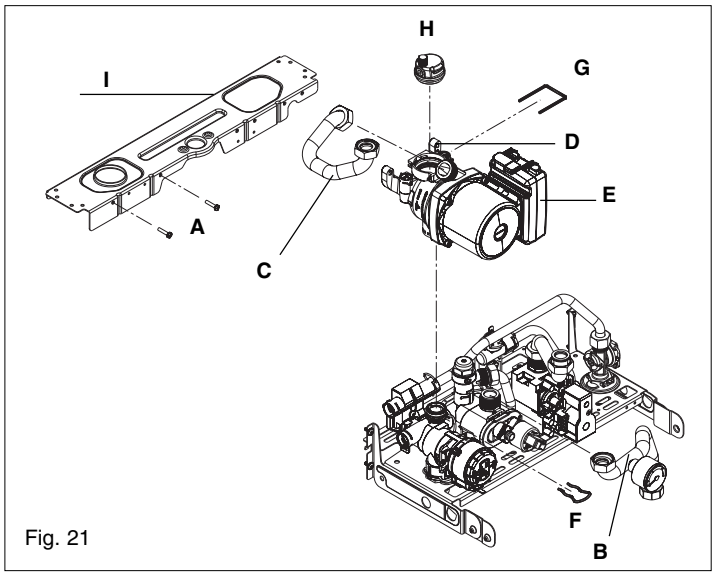

Fig. 21

6.6 SAFETY VALVE (fig. 22)

Carry out component removal procedure as described in 6.4. Disconnect the outlet pipe **(A)** from the safety valve, remove safety valve locking pin **(B)** from the hydraulic manifold. Replace in the reverse order.

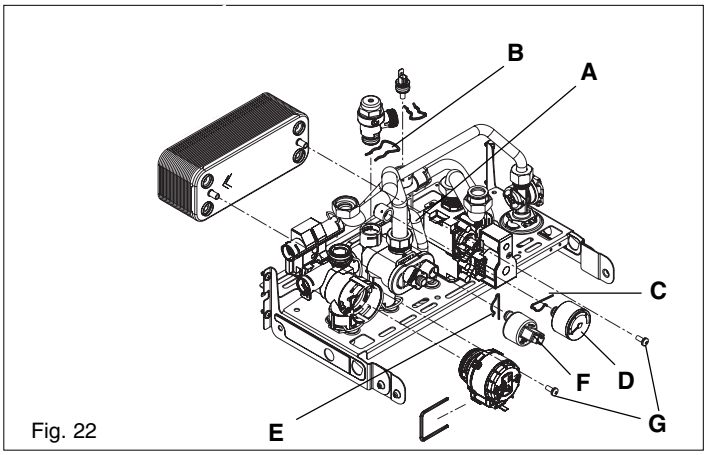

Fig. 22

6.7 BOTTOM AUTOMATIC AIR RELEASE VALVES (fig. 21)

Carry out component removal procedure as described in 6.4. Remove the expansion pipe locking pin **(D)** from the pump assembly and remove the expansion pipe. Locate and remove the AAV locking pin **(G)** from the pump assembly and remove the AAV assembly **(H)**. Replace in the reverse order.

6.7.1 TOP AAV (fig. 23)

Carry out component removal procedure as described in 6.4. Remove the locking pin **(A)**. Unscrew the top AAV **(B)**. Replace in the reverse order.

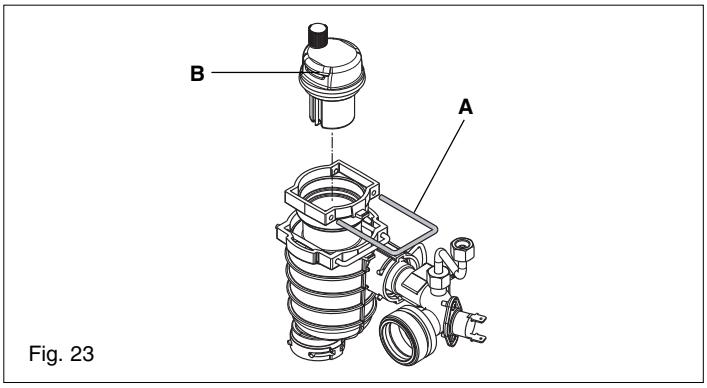

Fig. 23

6.8 WATER PRESSURE SENSOR AND GAUGE (fig. 22)

Carry out component removal procedure as described in 6.4. Locate and remove the locking pin **(C)** from the water pressure gauge assembly **(D)**. Remove the wiring. Carefully withdraw the assembly. Replace in the reverse order.

Carry out component removal procedure as described in 6.4. Locate and remove the locking pin **(E)** from the water pressure sensor assembly **(F)**. Remove the wiring. Carefully withdraw the assembly. Replace in the reverse order.

6.9 PRIMARY THERMISTOR (fig. 1)

Carry out component removal procedure as described in 6.4. Unclip and remove the air chamber front cover. Unclip the primary thermistor from the flow outlet pipe. Disconnect thermistor electrical plug. Replace in the reverse order.

6.10 RETURN THERMISTOR (fig. 1)

Carry out component removal procedure as described in 6.4. Unclip and remove the air chamber front cover. Unclip the return thermistor from the return inlet pipe. Disconnect thermistor electrical plug. Replace in the reverse order.

6.11 PRINTED CIRCUIT BOARD (fig. 24)

Carry out component removal procedure as described in 6.4. Lift the control fascia upward and rotate it.
Locate and remove the screws **(A)** which secure the PCB cover, push the clips **(B)** and remove cover, after carefully taking note of all wiring connections, disconnect all wiring from the PCB, locate and remove the PCB securing screws, remove the required PCB. Replace in the reverse order.

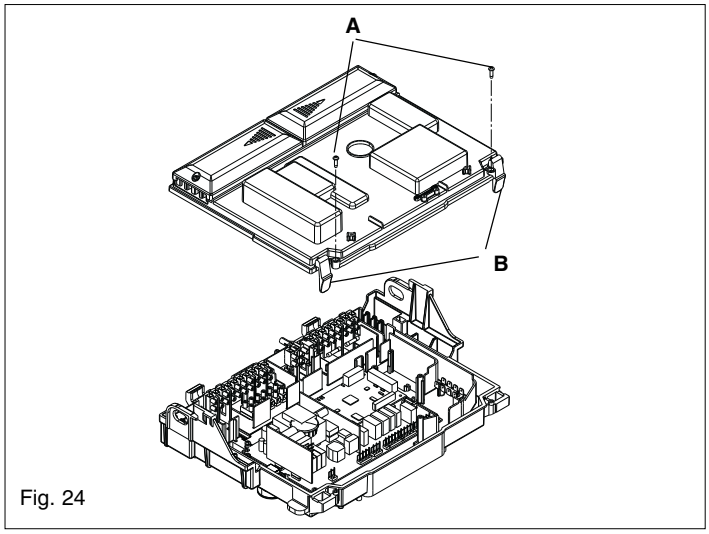

Fig. 24

6.12 GAS VALVE (fig. 14 & 25)

Carry out component removal procedure as described in 6.4. The gas valve must be changed as complete unit. Disconnect the electrical plug and leads from the gas valve, lacken and unscrew gas valve inlet (gas cock**, fig. 14)** and outlet **(A, fig. 25)** connections. **Please note,** the sealing washers **(B)** must be discarded and replaced with new sealing washers. Disconnect the compensation pipe **(C)**. Locate and remove gas valve retaining screws **(D)** on the underside of the boiler if required, the gas valve can now be removed. Replace in the reverse order. Check and adjust burner pressure settings.
WARNING, A GAS TIGHTNESS CHECK MUST BE CARRIED OUT.

6.12.1 LPG NOZZLES (fig. 25)

For removal, refer to the instructions below:
Remove the power supply from the boiler and close the gas tap.
Remove the lower cover and the casing, lift and rotate the dash board panel.
Open the air box cover. Disconnect the gas pipe from the mixer. Unscrew the mixer fixing screws and remove the mixer from the fan. Remove the screw securing the plastic venturi aluminum body. Leveraging their teeth (WARNING DO NOT FORCE), loosen the plastic venturi (B) and then the other side until you remove it completely from the aluminum body. Using a suitable sized spanner discard (DO NOT REUSE) the two nozzles (C), clean the waste plastic from its location. Fit the two new nozzles inside the kit until the threaded part, and then tighten. Assemble the mixer with the flap

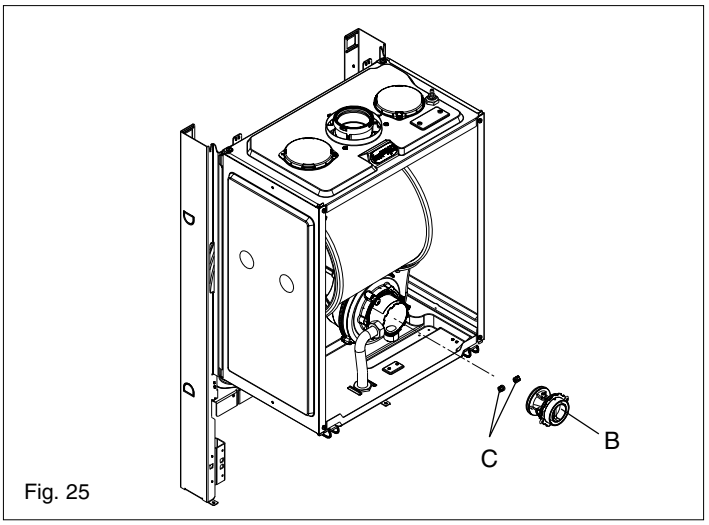

Fig. 25

in a horizontal position and the spacers located at 120 degrees as indicated in figure. Reassemble the gas pipe in the reverse. Check the speed of the fan. Turn on the power to the boiler and re-open the gas valve. Close the air box cover. Close the control dashboard. Replace the cover coat and the fittings. Programming the parameter “Type of gas” and adjust the boiler as described in “Adjustments.

Routine maintenance

Pay particular attention to the handling of the mixer: the clapper sticks out from the body, thus placing the mixer from the air intake (flap area) or if you need place it on the side of the clapper, pay attention that it is within the body. Never put the weight of the mixer on the clapper. During the annual cleaning of the system, clean the venturi from any dust using a vacuum cleaner. Check operation of the flap and the clapet (all open to the max flow rate, all closed to the minimum flow rate).

6.13 ELECTRODE & CONDENSE SENSOR (fig. 26)

Carry out component removal procedure as described in 6.4.
Unclip and remove the air chamber front and RH side covers. Disconnect the electrode lead and ancillary wiring from their respective connectors. Remove the 2 retaining screws **(A)** for electrode **(B)** and remove. Remove the retaining nut **(C)** for condense sensor **(D)** and remove.

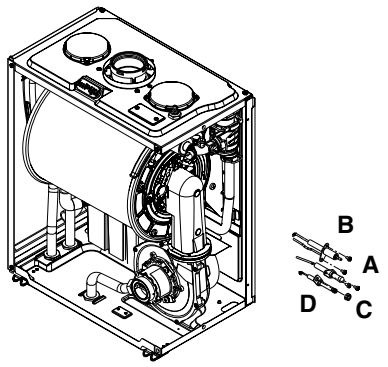

Fig. 26

6.14 FLUE FAN & MIXER (fig. 27)

Carry out component removal procedure as described in 6.4.
Unclip and remove the air chamber front and the RH side covers. Slacken the gas pipe **(A)** at the air box connection and swing/rotate of the fan assembly.
To remove the mixer **(B)** locate and remove the three screws **(C)**.
To remove the fan **(D)**, disconnect the electrical connections attached to the fan, locate and remove the four screws **(E)**.
Gently ease the fan from its location.
Replace in the reverse order. Ensure all seals are in good condition, taking care to ensure they are replaced correctly.

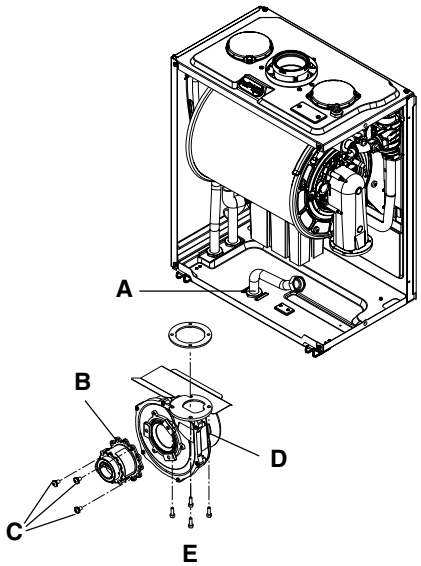

Fig. 27

6.15 BURNER (fig. 28)

Carry out component removal procedure as described in 6.4.
Unclip and remove the air chamber front and the RH side covers. Slacken the gas pipe **(A)** at the air box connection and swing/rotate of the fan assembly. Locate and remove the 3 internal nuts **(B)** which secure the fan assembly in position **(C)** to the heat exchanger **(D)**. Gently ease the fan assembly out of its location. Once the assembly has been removed, the burner **(E)** can be withdrawn from the heat engine. Ensure the seal **(F)** is in good condition, taking care to ensure it is replaced correctly. Replace in the reverse order.

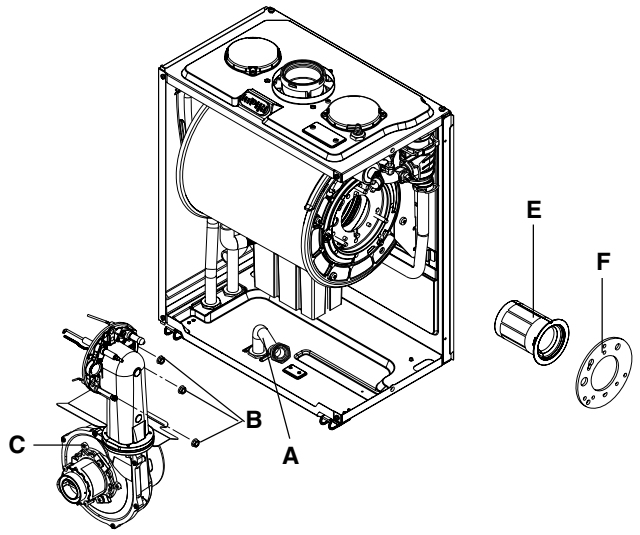

Fig. 28

6.16 MAIN HEAT EXCHANGER (fig. 29 & 30)

Carry out component removal procedure as described in 6.4.
Unclip and remove the three air chamber covers (front, LH, RH sides). Disconnect all the wiring connections.

Fig. 29: Slacken the gas pipe **(A)** at the air box connection and swing/rotate of the fan assembly.Disconnect the flow **(B)**, return **(C)** and condense connections on the heat exchanger. Locate and remove the 4-screws that secure the heat exchanger to the combustion chamber **(D)**. Move the heat exchanger to the right and disconnect it from the flue collector **(E)**. The heat exchanger can now be lifted up and withdrawn from the appliance.

Fig. 30: To remove the fan burner assembly **(A)** locate and remove the 3 external nuts **(B)**.

Replace in the reverse order. Ensure all seals are in good condition, taking care to ensure they are replaced correctly.

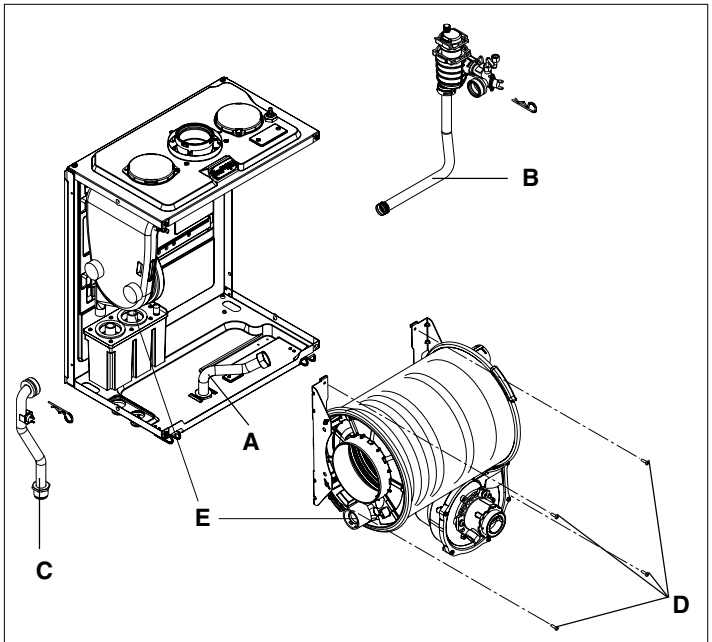

Fig. 29

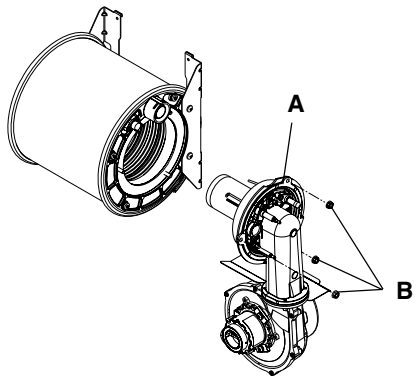

Fig. 30

6.17 FLOW RESTRICTOR (fig. 31)

Carry out the component removal procedure as described in 6.4. Disconnect the cold water inlet pipe at the DHW flow meter **(A)**. Using a small screwdriver, gently ease the flow restrictor **(B)** from its seating. Replace in the reverse order. Ensure all seals are in good condition, taking care to ensure they are replaced correctly.

6.18 DHW FLOW METER (fig. 31)

Carry out component removal procedure as described in 6.4. Remove the locking pin **(C)**. Disconnect and remove the cold water inlet pipe from the DHW flow meter & DHW heat exchanger. Disconnect the wiring to the DHW flow meter. Lacken and unscrew the inlet connection **(**cold water inlet stopcock**, fig. 14)**. Unscrew the nut **(D)**. Lift the DHW flow meter housing from its seating. If necessary remove the locking pin **(E)** from the DHW flow meter, taking care not to lose the float contained within the housing.
It is possible to clean internally the flow meter removing the locking pin.
Replace in the reverse order ensuring that the housing is firmly inserted onto its seating. Ensure all seals are in good condition, taking care to ensure they are replaced correctly.

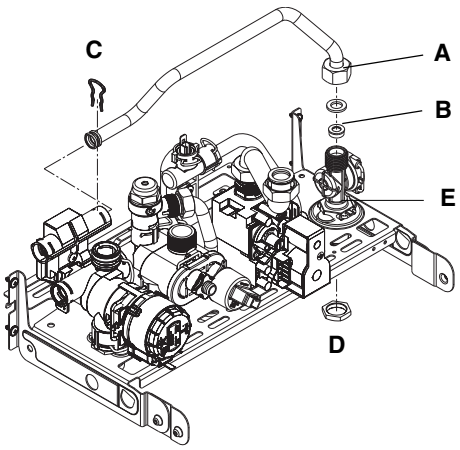

Fig. 31

6.19 DHW HEAT EXCHANGER (fig. 22)

Carry out component removal procedure as described in 6.4. Locate and remove the screws **(G)** that secure the heat exchanger to the DHW manifolds. Carefully remove the heat exchanger from its location taking care not to spill any residual water. Replace in the reverse order ensuring that the heat exchanger 'O' ring seals are correctly inserted into the DHW manifolds. Ensure all seals are in good condition, taking care to ensure they are replaced correctly.

6.20 VALVE ACTUATOR (fig. 32)

Carry out component removal procedure as described in 6.4. Remove the locking pin **(F)** that secures the actuator **(G)** to the heating manifold. Disconnect the electrical plug from the actuator. Replace in the reverse order.

6.21 DIVERTOR VALVE ASSEMBLY (fig. 32)

Carry out component removal procedure as described in 6.4. Remove the valve actuator as described in 6.20. Locate and remove the locking pin **(A)** that secures the valve housing cover to the hydraulic manifold. Gently prise the valve assembly from the manifold. Replace in the reverse order ensuring that the seating assembly is inserted properly. Ensure all seals are in good condition, taking care to ensure they are replaced correctly.

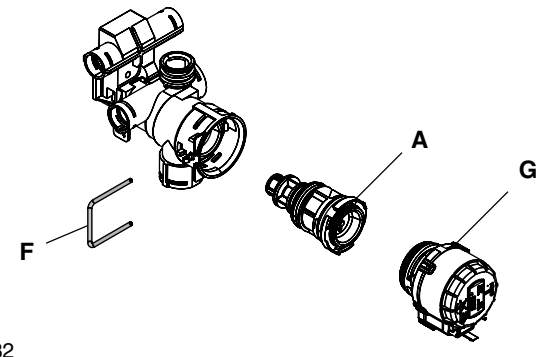

Fig. 32

6.22 DHW THERMISTOR (fig. 33)

Carry out component removal procedure as described in 6.4. Locate and remove the thermistor locking pin **(H)**. Gently ease the thermistor assembly **(I)** from the hydraulic manifold. Replace in the reverse order.

6.23 AUTOMATIC BY-PASS & DHW NON-RETURN VALVE (fig. 33)

Carry out component removal procedure as described in 6.4. Remove the locking pin **(A)** that secures the cover **(B)** to the hydraulic manifold. Using a hooked piece of wire, carefully withdraw the by-pass cartridge **(C)** and/or DHW non-return cartridge **(D)**. Ensure all seals are in good condition, taking care to ensure they are replaced correctly. Replace in the reverse order ensuring the cartridge is facing the correct way.

6.24 EXPANSION VESSEL (fig. 1)

Should the removal and replacement of the expansion vessel be deemed impractical, an external expansion vessel may be fitted to the return pipe as close to the appliance as possible.

6.24.1 EXPANSION VESSEL REMOVAL (with sufficient clearance above, fig. 21 & 34)

Carry out component removal procedure as described in 6.4.
Disconnect the flue from the appliance.
Disconnect the expansion vessel from the flexibleexpansion pipe.
Disconnect the flexible expansion pipe from the vessel. Unscrew the nut that secures the vessel to the frame **(I, fig. 21)**. Locate and remove the 6 screws **(A, fig. 34)** that secure the vessel top holding plate **(B, fig. 34)**, remove the plate.
The expansion vessel can now be removed.
Replace in the reverse order. Ensure all seals are in good condition, taking care to ensure they are replaced correctly.

6.25 CONDENSE TRAP REMOVAL (fig. 35)

Carry out component removal procedure as described in 6.4. Disconnect the 2 upper rubbers condense pipe **(A)**. Remove the pin **(B)** tah secures the trap to the air box plate. Disconnect the lower

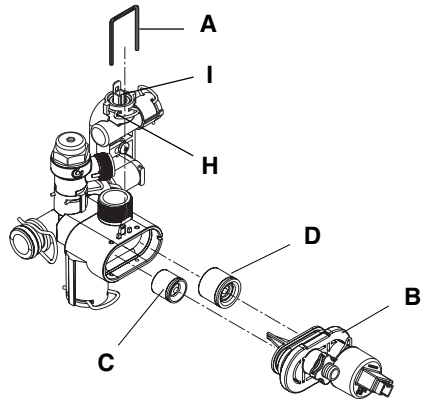

Fig. 33

rubber condense pipe **(C)** from the condense trap.
Carefully remove the condense trap. Replace in the reverse order.

6.26 FLUE COLLECTOR REMOVAL (fig. 36)

Carry out component removal procedure as described in 6.4.
Unclip and remove the air chamber front and left side covers. Locate and remove the screw **(A)** that secures the flue gas analysis test point cover **(B)**. Remove the clip and the fumes thermostat. Gently pull down and to the left and ease the flue collector from its location.
Replace in the reverse order.

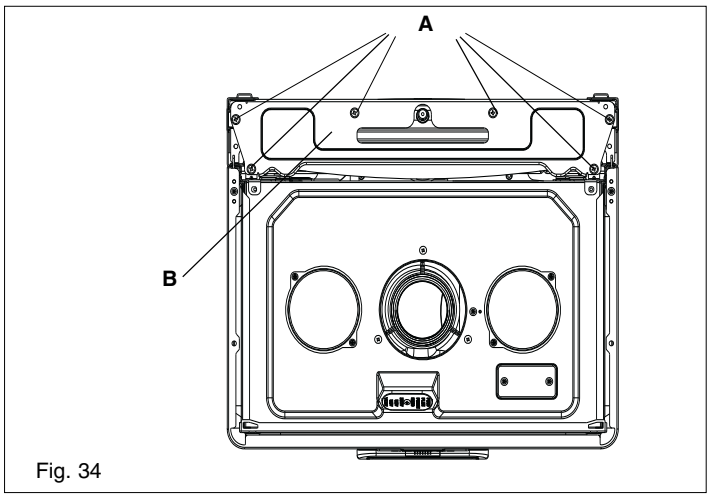

Fig. 34

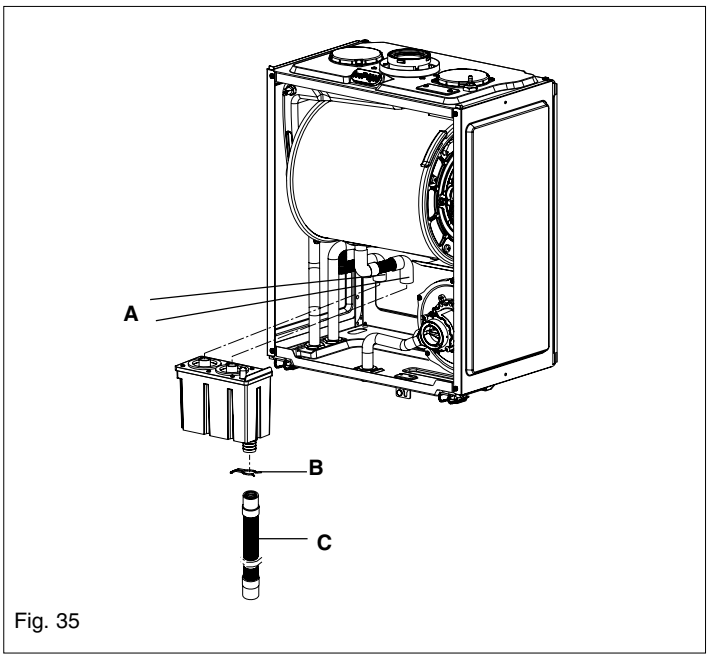

Fig. 35

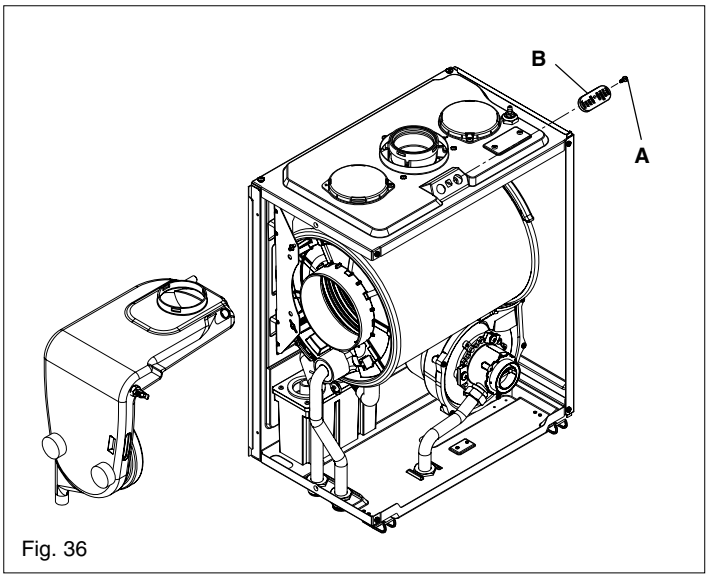

Fig. 36

SECTION 7 - CHECKS, ADJUSTMENTS AND FAULT FINDING

7.1 CHECKING APPLIANCE OPERATION

When carrying out any repairs or servicing to the appliance, the relevant commissioning procedure must be undertaken to ensure the continued safe operation of the appliance. Particular attention should be made to ensure gas tightness, water tightness, and the electrical integrity of the appliance.

7.2 APPLIANCE MODES OF OPERATION

NOTE

There must be sufficient system water pressure (min. 0.5 bar) to ensure the water pressure switch is activated. If there is insufficient system pressure the pump and fan will be prevented from operating and the low-pressure fault indicator will be displayed.

7.2.1 SELECTOR SWITCH IN THE OFF POSITION

When the boiler is in the STANDBY position, (see fig. 2) are displayed.

Active functions:
- Frost-protection system
- Pump anti-block
- Valve actuator anti-block.

7.2.2 BOILER "ON" IN HEATING MODE

When boiler is in the *Heating* position (see fig. 2) and the appliance is active for both heating and DHW requests.

Active functions:
- DHW pre-heat
- Booster function
- Frost-protection system
- Pump anti-block
- Valve actuator anti-block.

7.2.4 BOILER "OFF" IN HEATING MODE

When the function switch is in the *DHW* position, (see fig. 2) and the appliance is active for DHW requests.

Active functions:
- TSC function
- Frost-protection system
- Pump anti-block
- Valve actuator anti-block.

7.2.6 APPLIANCE FUNCTIONS

- **Comfort button:** by pressing the button, Comfort function enables and the correspondent symbol is displayed.
  By pressing the button, domestic hot water is supplied at the ideal temperature for shower; the standard temperature set is actually 40 °C.
  It is possible to modify Comfort temperature from 35 °C to 45 °C with a 0,5 °C correction. In order to change this temperature, after selecting the function, press the button and turn the selector **A**.
  The set temperature is displayed.
  Comfort function avoids searching for the right mix between hot and cold water in order to obtain the right temperature for shower.
  Note
  The value set is memorized by the boiler, so that, the next time you select Comfort button, the boiler should be ready to supply the water at the desired temperature.

- **Memory key:** by pressing the button, Memory function enables and the correspondent symbol is displayed.
  Memory function simultaneously enables a double electronic intelligence:
  • domestic hot water intelligence
  • heating intelligence.

  DHW Memory
  By enabling Memory button, the intelligence of the machine begins to memorize the usage habits of the user. After only one week, Memory function would have already learned the user's habits of using domestic hot water and therefore should be able to pre-heat it for each request.
  The pre-heating is performed in the half hour before the request made in the day and at the hour memorized the week before.
  Example
  Thursday 15th at 7.00 a.m. a domestic hot water request is made. Next Thursday, the 22nd, at 6.30 a.m., the boiler performs the pre-heating of domestic hot water.
  When the user makes the hot water request at 7.00 a.m., finds the water already at the desired temperature.
  If it is necessary to have pre-heated water besides the usual habits, please use the Touch & Go function.
  In case the boiler lacks power supply, the data memorized by this function will be lost. When the boiler is power supplied again, Memory function restarts to memorize the habits. In order to benefit by the advantages off Memory function, you have to wait for one week to pass.

  CH Memory
  By enabling Memory button, the boiler takes in consideration the time that passes from ignition and after 10 minutes increases the delivery temperature memorized with 5 °C.
  Memory repeats the cycle until the room temperature set on the room thermostat is reached or until the maximum temperature allowed is reached.
  Due to this automatic function, it is possible to select lower delivery temperatures and at the same time to reduce the time for reaching the set room temperature.

- **SARA function**: while adjusting the heating temperature, from the minimum value 40°C to the maximum value 80°C, the field where the H.T.C. system enables is met: Heating Temperature Control (from 55°C to 65°C).
  The H.T.C. system autonomously manages the delivery temperature, adapting the boiler's operation to meet the dwelling's real needs.
  When the heat need extends, the delivery temperature increases allowing a faster heating of the environment.
  Once the desired comfort is reached, the system restores the delivery temperature to the value set at the beginning. All this assures minor consumptions, minor limestone deposits in the boiler and minor thermal ranges in the radiators.

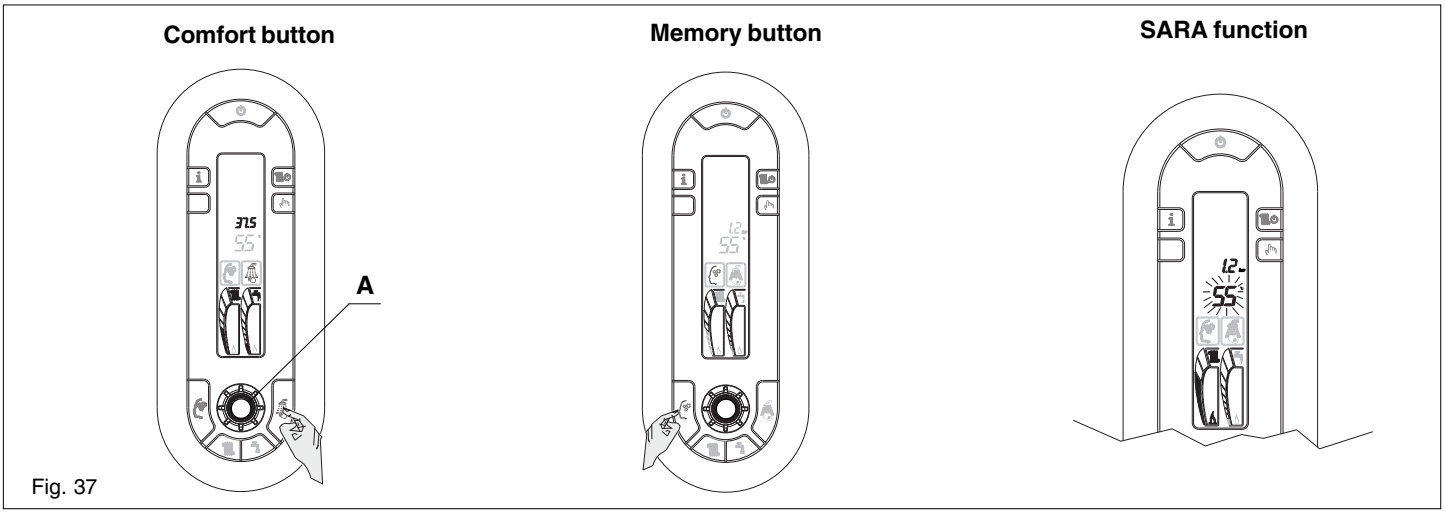

Fig. 37

- **Touch & Go Function:** if you don't wish to keep the Memory function always enabled or if you need hot water to be ready fast besides the usual habits memorized, it is possible to perform the domestic hot water pre-heating only a few moments before the request.
  Due to Touch & Go function, by turning on and off the tap the instantaneous pre-heating function enables, which prepares hot water only for that request.
- **Frost-protection:** this function is only active when there are no requests for heating or HW. Should the temperature of the primary thermistor drop below 7°C, the valve actuator will motor to the heating position. Should the temperature of the primary thermistor exceed 10°C during this period, the cycle will be aborted. If the temperature drops below 4°C, the boiler will operate on minimum power until the temperature of the primary thermistor reaches 30°C. Thereafter the pump & fan will over-run for 30-seconds.
- **Pump/actuator anti-block cycle:** when there has been no heating or HW request for 24-hours, the anti-block cycle is activated. The valve actuator will motor from the DHW position to the heating position for a period of 10-seconds and then motor back to the DHW position. Thereafter the pump will be activated for a period of 1-minute. If the selector switch is in the Heating & HW position, the fan will also be active for 1-minute.

7.2.7 HEATING MODE

Press the button to select the heating mode: the display will show boths layers.
The valve actuator will motor to the heating position and the pump and fan will be activated via the flow temperature sensor. When the fan is sensed to be operating correctly, the ignition sequence commences. Ignition is sensed by the electronic circuitry to ensure flame stability at the burner. Once successful ignition has been achieved, the electronic circuitry allows 75% 0f the full gas rate through the appliance. After 15 minutes (adjustable, see parameter 28, cap. 7.3.1) the gas rate is increased to maximum (100%).
The speed of the fan and therefore the output of the boiler is determined by the temperature of the water sensed by the flow temperature sensor, consequently a high temperature at the flow sensor results in a lower fan speed. As the water temperature increases, the temperature sensors – located on the flow pipe of the boiler – reduce the fan speed via the electronic circuitry. Depending on the load, either the water temperature will continue to rise until the set point is achieved or the water temperature will fall whereby fan speed will increase relative to the output required. When the boiler has reached the set point, the burner will switch off. The built-in anti-cycle device prevents the burner from re-lighting for an adjustable period of time (factory default is 5 minutes). When the temperature of the flow sensor falls below the set-point, the burner will re-light.

NOTE
If the spark/sensing electrode does not sense ignition the appliance will re-attempt ignition a further 4-times then go to lockout.

When the set-point has been reached (the position of the heating temperature selector) as measured at the primary thermistor, the appliance will begin the modulation phase whereby the fan and gas valve will continuously modulate to maintain the set-point. If the temperature continues to rise and exceeds the set-point by 6°C, the burner will shut down. A new ignition sequence will be enabled when the 5-minute anti-cycle has been performed and the temperature at the primary thermistor has dropped 6°C below the set-point.

NOTES
Any DHW request will always have priority over the heating request.
When the request for heating has been satisfied, the appliance pump and fan may continue to circulate to dissipate any residual heat within the appliance.

Fig. 38

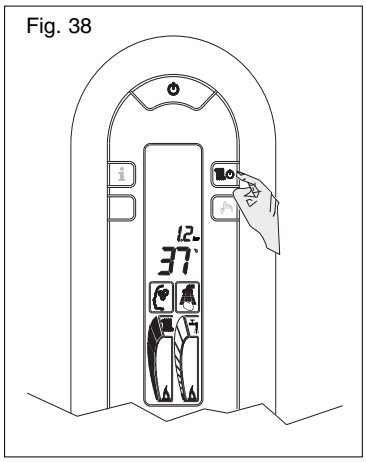

7.2.8 DHW MODE

Press the key to select the DHW mode: the display will show only the DHW layer.
The valve actuator will motor to the HW position (if a heating request was active) and the pump and fan will be activated via the flow temperature sensor. When the fan is sensed to be operating correctly, the ignition sequence commences. Ignition is sensed by the electronic circuitry to ensure flame stability at the burner.
Once successful ignition has been achieved, the electronic circuitry modulates the appliance output in order to achieve the DHW set-point (the position of the DHW temperature selector) as measured at the DHW thermistor. When the set-point has been reached, the appliance will begin the modulation phase whereby the fan and gas valve will continuously modulate to maintain the set-point.
If the temperature continues to rise and exceeds the set-point by 5°C, the burner will shut down until the temperature drops to set-point + 4°C, whereby a new ignition sequence will be enabled.
If the TSC function is active the set point will be overridden until/unless the appliance reaches the maximum operating temperature.
When the request for DHW has been satisfied, the appliance fan may continue to operate to dissipate any residual heat from within the appliance.

7.2.9 ADJUSTING HEATING TEMPERATURE WITH AN EXTERNAL PROBE CONNECTED

When an external probe is connected, the value of the delivery temperature is automatically chosen by the system which rapidly adjusts the room temperature according to the variations in external temperature.
The external probe symbol appears on display and just the central segment of the heating bar lights up.
If you want to adjust the temperature value, by increasing or increasing it given the value automatically calculated by the electronic board, proceed as follows:
- press the heating temperature adjustment key , the number corresponding to the set comfort level will appear on the two digits **B** (standard setting)
- turn the selector **A** to increase or decrease the comfort level (the number corresponding to the selected comfort level will appear on the two digits +1, +2 etc or -1, -2 etc).
  The illuminated segment of the heating bar will increase or decrease. Correction tolerance lies between - 5 and + 5 comfort.

These corrections are very important between seasons, when the value calculated by the curve could result too low and therefore the time for reaching the set room temperature could be too long. After 3 seconds from the last adjustment, the value is automatically memorized and the display shows again the value recorded instantaneously by the probe.

Adjusting domestic hot water temperature
- Press the key and turn the selector **A** to select desired domestic hot water temperature. The big digits will light up on display, indicating the selected temperature value.
  After a few seconds the display will show again the delivery temperature, effectively recorded by the boiler's probe.

Fig. 39

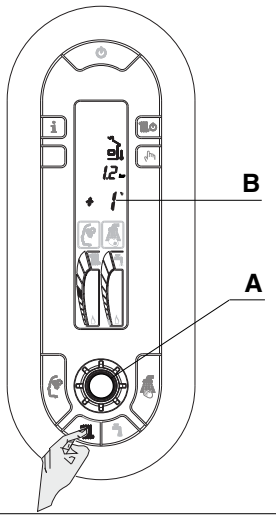

7.3 SERVICE MODE & PARAMETERS

This boiler is equipped with a new generation of electronic boards, which allow a better personalization by setting / adjusting the machine's operating parameters, in order to answer the installation and/or usage needs. The programmable parameters are indicated in the table at page 24.

⚠ The parameters programming must be done with the boiler on OFF position. Press the ⏻ key until you see "ENERGY FOR LIFE" scrolling on display.

⚠ During the parameters programming, the ⏻ key assumes the function of ENTER (confirm) and the i key the function of ESC (exit).

⚠ If you don't confirm the setting within 10 seconds, the value is not memorized and the boiler returns to the value previously set.

Setting the password

By holding down the i key and then pressing the ⏻ key for about 3 seconds, you may access the parameters programming.
The display will show the word PROG and immediately after CODE. Press ENTER to confirm. Enter the password code for accessing the parameters adjusting function by turning the selector to obtain the value required. Confirm password by pressing ENTER.
The password for accessing the parameter programming function is located on the back side of the control panel.

Modifying parameters

- Turn the selector **A** to scroll the two number codes of the parameters indicated in the table.

After identifying the parameter you wish to modify, proceed as follows:

- press ENTER access the parameter value adjustment function. When you press ENTER the value previously set is flashing
- turn the selector **A** to select the value desired
- confirm the new value by pressing ENTER. The digits will stop flashing
- exit the function by pressing ESCAPE.

The boiler will go back to off mode, to resume operation press the ⏻ key.

Fig. 40

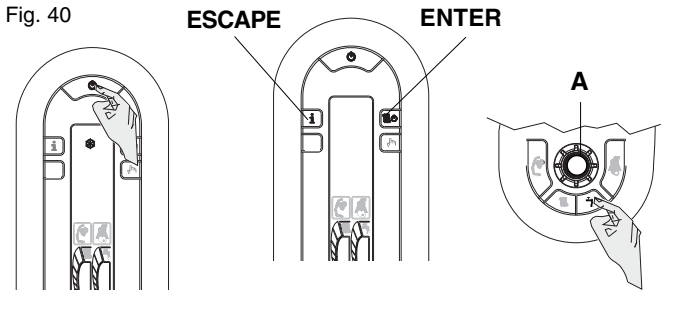

PARAMETER

N° PAR.	PARAMETER	UNITÀ	MIN	MAX	DEFAULT	INSTALLAT SETTING
1	This parameter is not used on this model. Do not modify				1	
2	This parameter is not influential		10 (10kW) 16 (16kW) 20 (20kW) 26 (25kW) 30 (30kW) 34 (35kW) 50 (50kW) 70 (70kW)		30	
3	Building structure	min	5	20	5	
10	DHW-type		0 (OFF) 1 Instant water heater (combi) 2 N/A 3 N/A 4 N/A 5 N/A 6 N/A		1	
11	Max set-point for DHW	° C	40	60	60	
12	This parameter is not used on this model. Do not modify				60	
13	This parameter is not used on this model. Do not modify				80	
14	This parameter is not used on this model. Do not modify				5	
20	Central heating type		0 (OFF) 1 (ON) 2 N/A 3 N/A 4 N/A 5 N/A 6 N/A 7 N/A 8 N/A		1	
21	Max flow temperature 1st CH	° C	40	80	80	
22	Min flow temperature 1st CH	° C	20	39	20	
23	Max output CH (fan speed)	rpm		NG LPG 50(*) 49(*)	MAX	
24	Min output CH (fan speed)	rpm	NG LPG 12(*) 18(*)		MIN	
25	Differential heating positive	° C	2	10	6	
26	Differential heating negative	° C	2	10	6	
28	CH timer: force burner 75% after CH-start	min	0	20	15	
29	CH timer: blocking time CH	min	0	20	5	
30	CH timer on/off selection	-	0 (NO)	1 (SI)	0	
31	Max flow temperature 2nd CH	° C	40	80	45	
32	Min flow temperature 2nd CH	° C	20	39	25	
40	DHW thermostat		0 (OFF) 1 (AUTO) 2 (ON)		1	
41	DHW Memory		0 (OFF) 1 (AUTO) 2 (ON)		1	
42	S.A.R.A. Function		0 (OFF) 1 (AUTO)		1	
43	CH Memory		0 (OFF) 1 (AUTO)		1	
44	1st CH circuit climatic Thermo-regulation [2]		0 (OFF) 1 (AUTO)		1	
45	Climatic curve selection on 1st CH circuit [2]	-	2,5	40	20	
46	2nd CH circuit climatic Thermo-regulation[1-2]		0 (OFF) 1 (AUTO)		1	
47	Climatic curve selection on 2nd CH circuit [1-2]	-	2,5	40	10	
48	This parameter is not used on this model. Do not modify				-	
50	Touch & Go function		0 (OFF) 1 (AUTO)		1	
51	This parameter is not used on this model. Do not modify				0	
52	This parameter is not used on this model. Do not modify				0	
61	DHW frost protection temperature	°C	0	10	4	
62	CH frost protection temperature	°C	0	10	6	
63	This parameter is not used on this model. Do not modify				6	
65	External probe reactivity		0 (fast)	255 (low)	20	
85	This parameter is not used on this model. Do not modify				0	
86	Pressure value alarm (ON)	bar	0.4	1.0	0.6	
87	This parameter is not used on this model. Do not modify	-				
90	Modulating pump	-	0	100	41	
92	Condensate or condensate sensor (D).	-	0	1	0	
93	Condensate or condensate sensor (T)	-	1	255	5	
94	Condensate sensor or open circuit (D)	-	0	1	0	
95	Condensate sensor or open circuit (T)	-	0	1	0	

[1] Only with 2nd CH circuit
[2] Working only if an external sensor is fitted
* The value is shown on the display as rpm/100 (i.e. 3700/100 = 37)

7.4 ADJUSTMENTS

If adjustments are required again, for example after ordinary maintenance you need to replace the gas valve or after converting from natural gas to LPG or from LPG to natural gas, proceed as follows.

⚠ **Maximum and minimum power, minimum and maximum heating, must be adjusted in the indicated sequence and only by qualified personnel from the Technical Assistance Service.**

- **Turn off the general system power switch**
- Remove the casing (fig. 15)
- Move forward and then upwards the lower part of the casing to unhook it from the support plate
- Lift up the panel and then turn it forward
- Loosen the gas pressure check downstream from the gas valve by about two turns and connect the pressure gauge to it
- Remove the protection cover of the adjustment screws, using a screw
- Disconnect the compensation pipe connection from the air chamber.

⚠ CALIBRATION & SERVICE operations must be performed with the boiler on OFF position. To do this, press the ⏻ key until you see "ENERGY FOR LIFE" scrolling on display.

⚠ During the parameters adjustment operations, the ⏻ key assumes the function of ENTER (confirm) and the i key the function of ESC (exit). If you don't confirm the setting within 10 seconds, the value is not memorized and the boiler returns to the value previously set.

Setting the password

By holding down the i key and then pressing the ⏻ key for about 3 seconds, you may access the parameters programming.
The display will show the word PROG and immediately after CODE. Press ENTER key to confirm.
Enter the password code for accessing the parameters adjusting function by turning the selector to obtain the value required. Confirm password by pressing ENTER. The password for accessing the parameter programming function is located on the back side of the control panel.

Calibration phases

By turning the selector the CALIBRATION & SERVICE phases scroll one by one:
- 1 gas type (not change this parameter)
- 2 boiler power (parameter is not influential)
- 3 building insulation level (displayed only if an external probe is connected)
- 10 DHW mode (not change this parameter)
- 23 maximum heating adjustment
- 24 minimum heating adjustment (not change this parameter)
- 45 thermoregulation curve slope (displayed only if an external probe is connected)
- HH boiler at maximum power
- LL boiler at minimum power
- HP max fan speed (not change this parameter)
- LP min fan speed (not change this parameter)
- SP start-up fan speed (not change this parameter)

GAS TYPE - 1

Adjust the set value as fallows:
- press ENTER to access the parameter value programming. When you press ENTER the digits start flashing, pointing out the value previously set
- turn the selector to select desired value (1 MTN - 2 LPG)
- confirm the new set value by pressing ENTER. The digits will stop flashing.

ABSOLUTE MAX FAN SPEED - HP

Select the parameter HP by turning the encoder; push ENTER button, it is possible to set the absolute max fan speed that is related to gas type and boiler output. Modify this parameter only if strictly necessary.
The value is shown on the display as rpm/100 (i.e. 3600/100 = 36).
The set value automatically modifies the min value of parameter 23.

ABSOLUTE MIN FAN SPEED - LP

Select the parameter LP by turning the encoder; push ENTER button, it is possible to set the absolute min fan speed that is related to gas type and boiler output. Modify this parameter only if strictly necessary.
The value is shown on the display as rpm/100 (i.e. 3600/100 = 36).
The set value automatically modifies the min value of parameter 24.

START-UP FAN SPEED - SP

Select the parameter SP by turning the encoder; push ENTER button, it is possible to set the start-up fan speed. Modify this parameter only if strictly necessary.
The value is shown on the display as rpm/100 (i.e. 3600/100 = 36).

GAS VALVE MAXIMUM SETTING - HH

Select the HH parameter by turning the encoder; the boiler starts at the maximum power, the CO_2 reading should be as shown in the table below(for LPG see 9.2.
If the CO_2 reading is correct, pass to gas valve minimum setting (7.4.7). If the CO_2 reading is incorrect, the maximum gas pressure must be adjusted as follows: using a 2,5mm Allen key, very slowly turn the maximum adjustment screw (see fig. 41) – clockwise to decrease, counter clockwise to increase – until the correct value is displayed on the CO_2 analyser (allow time for the analyser to stabilise).

GAS VALVE MINIMUM SETTING - LL

Select the LL parameter by turning the encoder. The boiler starts at the minimum power, the CO_2 reading should be as shown in the table above.
If the CO_2 reading is correct, pass to gas valve final setting (7.4.8).
If the CO_2 reading is incorrect, the minimum gas pressure must be adjusted as follows: using a 4mm Allen key, very slowly turn the minimum adjustment screw (see fig. 41) – clockwise to increase, counter clockwise to decrease - until the correct value is displayed on the CO_2 analyser (allow time for the analyser to stabilise).

RANGE RATED MAXIMUM OUTPUT CH (FAN SPEED) - 23

Select the parameter 23 by turning the encoder. Push ENTER button and modify the maximum fan speed as indicated in the range rated table by turning the encoder. Push ENTER button to store the value. The values just setted must be recorded on the last page of this manual.

MINIMUM OUTPUT CH (FAN SPEED) - 24

Select the parameter 24 by turning the encoder. Push ENTER button, it is possible to modify the minimum fan speed by turning the encoder. Push ENTER button to store the value.
Exit the CALIBRATION & SERVICE functions by pressing ESCAPE.

The boiler will go back to off mode, ENERGY FOR LIFE scrolling on display.
- Reconnect the compensation pipe connection to the air chamber
- Disconnect the pressure gauge and screw back the gas pressure check screw.

To resume operation, press the ⏻ key.

⚠ After adjusting the gas valve, always seal it with sealing wax.

Note An existing boiler with a measured CO/CO_2 ratio of 0.004/1 or less can be deemed as operating satisfactorily, with a measured CO/CO_2 ratio of greater than 0.004/1 can be deemed as at risk, with a measured CO/CO_2 ratio of greater than 0.008/1 can be deemed as immediately dangerous.

MAX NR FAN SPEED CH	(G20)	(G31)	
LINEA ONE	50	49	rpm

MAX NR FAN SPEED DHW	(G20)	(G31)	
LINEA ONE	62	62	rpm

MIN NR FAN SPEED	(G20)	(G31)	
LINEA ONE	12	18	

CO_2 max	(G 20)	(G 31)	
LINEA ONE	9,0	10,0	%

CO_2 min	(G 20)	(G 31)	
LINEA ONE	9,5	10,0	%

7.5 COMBUSTION ANALYSIS TEST

A combustion analysis check can easily be carried out on the appliance via the test points located on the top of the appliance, however you must check that the CO_2 values are set correctly (see 7.4).

- Insert the flue gas analyser probe into the flue gas test point (see fig. 36).
- Operate the boiler in HH - LL and compare the values with those shown in 7.4.6. If different adjust the gas valve according to 7.4.6. and 7.4.7.

7.6 CHECKING THE EXPANSION VESSEL

Carry out the component removal procedure as described in 6.4. You must ensure that the boiler is completely drained of water.
Using a suitable pressure gauge, remove dust cap on expansion vessel and check the charge pressure. The correct charge pressure should be 1.0 bar ± 0.1 bar. If the charge pressure is less, use a suitable pump to increase the charge.

NOTE

You must ensure the drain valve is in the open position whilst re-charging takes place. Replace the dust cap and carry out the relevant commissioning procedure (section 5).

7.7 EXTERNAL FAULTS

Before carrying out any faultfinding or component replacement, ensure the fault is not attributable to any aspect of the installation.

7.7.1 INSTALLATION FAULTS

7.8 ELECTRICAL CHECKS

Any electrical checks must be carried out by a suitably qualified person.

7.8.1 EARTH CONTINUITY TEST

Isolate the appliance from the electrical supply, and using a suitable multi-meter carry out a resistance test. Connect test leads between an appliance earth point and the earth wire of the appliance supply cable. The resistance should be less than 1 OHM. If the resistance is greater than 1 OHM check all earth wires and connectors for continuity and integrity.

7.8.2 SHORT CIRCUIT CHECK

Isolate the appliance from the electrical supply, and using a suitable multi-meter, carry out a short circuit test between the Live & Neutral connections at the appliance terminal strip.
Repeat above test on the Live & Earth connections at the appliance terminal strip.

NOTE

Should it be found that the fuse has failed but no fault is indicated, a detailed continuity check will be required to trace the fault. A visual inspection of components may also assist in locating the fault.

Symptom	Possible causes
No ignition	Check wiring. Check electrical supply
No hot water	Check hot/cold pipe work is not reversed
No central heating	Check wiring of time clock and/or room thermostat

Fault code	Possible causes
10	Gas supply problem. Gas line requires purging. Reversed polarity. Broken, internal flue joint
40	Insufficient water pressure. Air in boiler

7.8.3 POLARITY CHECK

With the appliance connected to the electrical supply and using a suitable multimeter, carry out the following voltage tests:

- connect test leads between the Live & Neutral connections at the appliance terminal strip. The meter should read approximately 230V ac. If so proceed to next stage. If not, see 7.8.4.
- connect test leads between the Live & Earth connections at the appliance terminal strip. The meter should read approximately 230V ac. If so proceed to next stage. If not, see 7.8.4.
- connect test leads between the Neutral & Earth connections at the appliance terminal strip. The meter should read approximately 0 – 15Vac. If so polarity is correct. If not, see 7.8.4.

Fig. 41

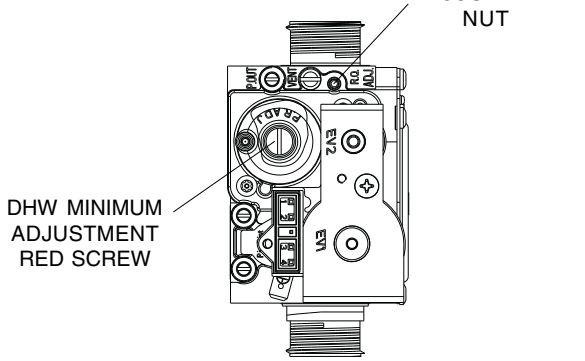

7.8.4 REVERSED POLARITY OR SUPPLY FAULT

Repeat the above tests at the appliance isolator, if testing reveals correct polarity and/or supply at the isolator, re-check wiring and connections between the isolator and the appliance.
If tests on the isolator also reveal reversed polarity or a supply fault, consult the local electricity supplier for advice.

7.8.5 RESISTANCE TO EARTH CHECK

Isolate the appliance from the electrical supply, and using a suitable multi-meter carry out a resistance tes. Connect test leads between the Live & Earth connections at the appliance terminal strip (fig. 17). If the meter reads other than infinity there is a fault that must be isolated, carry out a detailed continuity check to identify the location of the fault.

IMPORTANT

These series of checks must be carried out before attempting any faultfinding procedures on the appliance. On completion of any task that required the disconnection and re-connection of any electrical wiring or component, these checks must be repeated.

7.9 FAULT FINDING

Before attempting any faultfinding, the electrical checks as detailed in 7.8 must be carried out.

Isolate the appliance from the electrical supply. Disconnect any external controls from terminal plug M6, and insert a link-wire between the two Black wires at terminal plug M6.

NOTE

Restore the electrical supply to the boiler and turn the selector switch to the on position. The boiler should now function as described in section 7.2. Should the boiler fail to respond, the internal fuses and connectors should be checked to ensure integrity and continuity. If the boiler still fails to respond, refer to the detailed faultfinding flowcharts overleaf.

7.10 TEMPORARY FAULT CODES

The built-in fault diagnostic system automatically displays a unique faul code that can be used to determine why the boiler has temporarily locked out. When the boiler displays a temporary fault code, the appropriate code is shown flashing on the display, accompanied by the symbol 🔧.

7.11 FINAL FAULT CODES

When the boiler displays a final fault code, the appropriate code is shown flashing on the display, accompanied by the symbol RESET (RESET).

7.11.1 CODE ERROR + RESET (RESET) ONLY

To reset the boiler, push ⏻ button. If the boiler starts without any problems, the lock-out is probably due to an accidental situation.

7.11.2 CODE ERROR + RESET (RESET) + 🔧

Refer to the following section and the detailed fault finding flow-charts overleaf.

Code	Reason
11	false flame
12	restart ignition
13	check the wiring harness
23	check the wiring harness
25	high limit flow temperature probe
27	high limit return temperature probe
41	low water pressure
60	DHW NTC error
71	flow NTC error (2nd CH)
77	over heat underfloor thermostat (2nd CH)
78	flow/return ΔT error (2nd CH)

Code	Reason
10	no flame detected
14	check the wiring harness
15	false flame
20	high limit thermostat/fume thermostat
21	check the wiring harness
22	check the wiring harness
24	high limit flow temperature probe
26	high limit return temperature probe
28	flow/return ΔT error
29	check the wiring harness
34	fan error (start-up)
37	fan error (high rpm)
40	low water pressure
42	pressure transducer fault
50-59	internal PCB failure
70	flow NTC error (2nd CH)
72	return NTC error (2nd CH)
79	flow/return ΔT error (2nd CH)
80-83	internal fault
91	condensing heat exchanger cleaning requirement

Alarm 91 - Contact the Technical Assistance

The boiler has a self-diagnosis system which, on the basis of the hours totalised in particular operating conditions, signals the need for maintenance or cleaning of the primary exchanger (alarm code 91).

SECTION 8 - WIRING DIAGRAMS

8.1 EXTERNAL WIRING

The appliance comes with a factory fitted link to allow basic operation of the boiler via the mode selector switch. If external controls are to be added to the system, they must be connected to the appliance as shown in the following diagrams. For advice on controls that are not featured in this book, please contact Vokera technical on 0844 391 0999.

8.2 TYPICAL CONTROL APPLICATIONS

The appliance can be used with the following controls:

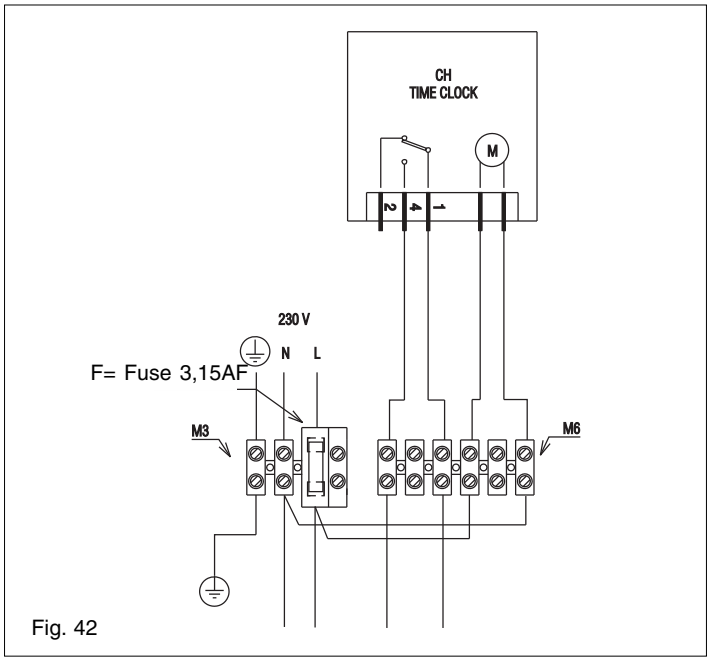

Fig. 42

- Vokera room thermostat (part no. 011)
- Vokera external sensor. (Part no. 2359259)
- Single-channel, voltage-free time clocks
- Programmable room thermostats.

In addition, the appliance can be used in conjunction with a typical 'S'-Plan system, please contact Vokera technical for further detailed instruction.

NOTE

This appliance is not suitable for use with 'Y'-Plan systems.

8.3 VOKERA ROOM THERMOSTAT

Connect the Vokera room thermostat to the appliance as detailed in fig. 44.

The Vokera room thermostat can be used as detailed in fig. 44.

8.4 OTHER DEVICES

Fig. 46 details typical devices that are suitable for this appliance:

- **TBT**: low temperature thermostat for underflow heating, a safety device that prevent overheating
- **SE**: outside sensor, a NTC sensor that automatically calculates the flow temperature according to the outside temperature
- **P2**: external pump, a supplementary pump that can be managed directly from the boiler in order to satisfy larger systems with high flow rate or high pressure drop (i.e. underfloor heating).

⚠ Contact the controls manufacturer and/or Vokera technical department should you require more specific information on the suitability of a particular control. Further guidance on the recommended practice for the installation of external controls, can be found in CHeSS – HC5/HC6 (www.energy-efficiency.gov.uk).

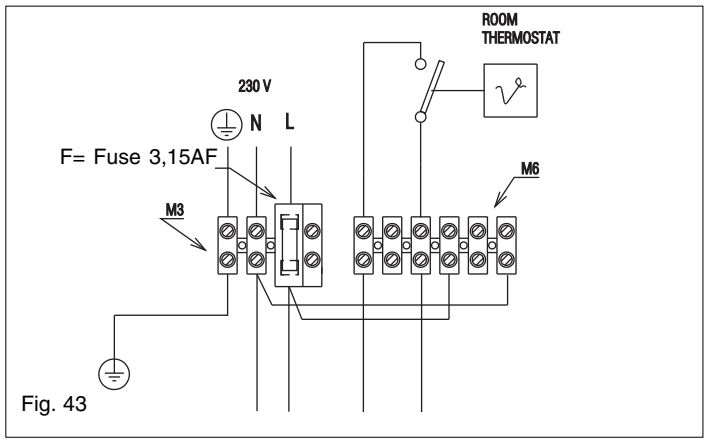

Fig. 43

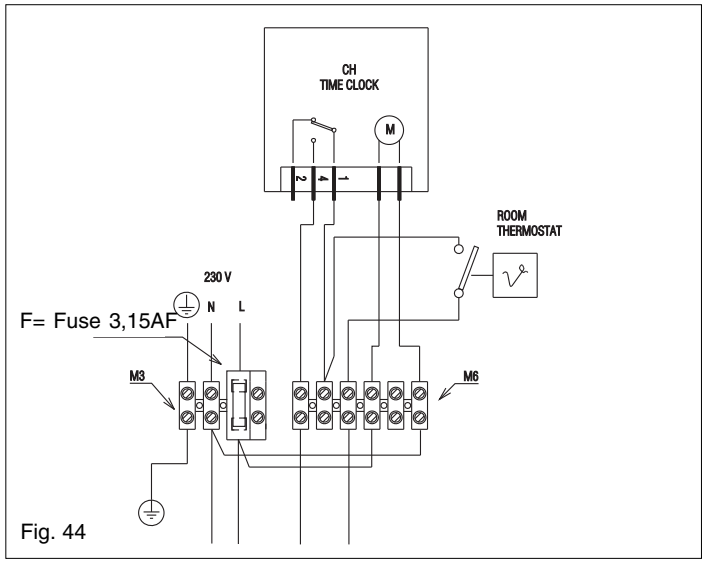

Fig. 44

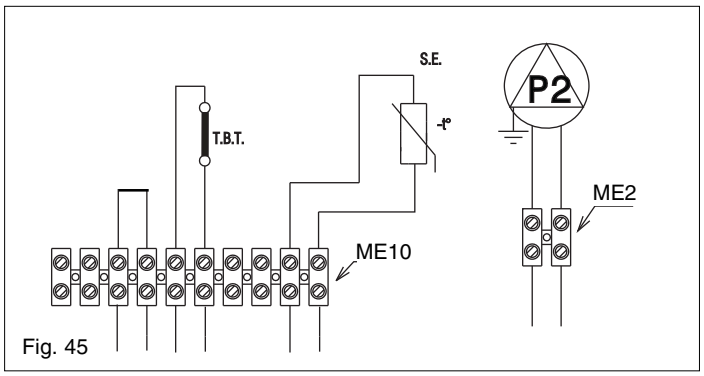

Fig. 45

FUNCTIONAL DIAGRAM

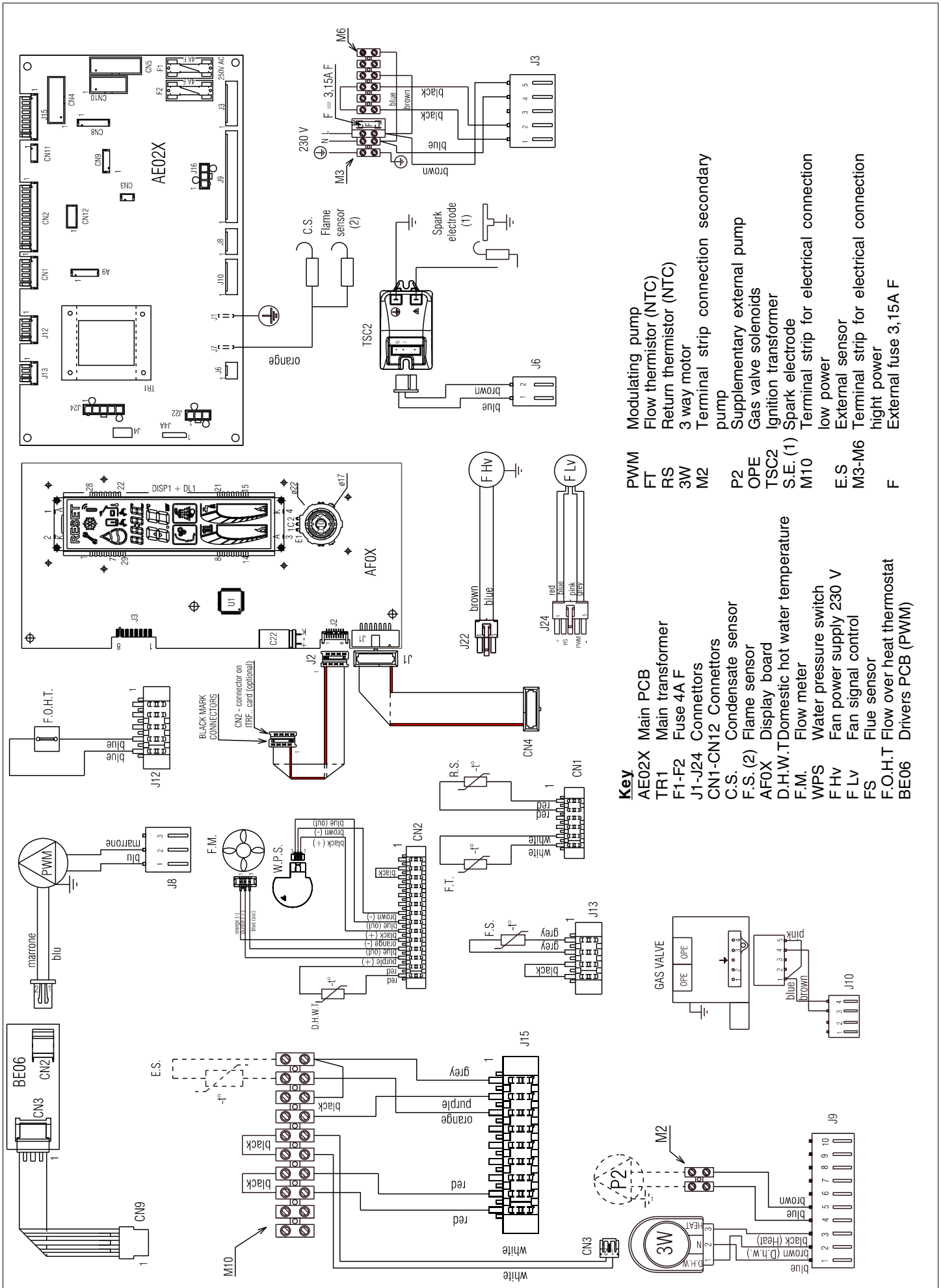

Fig. 46

PCB	PLUG or CONNECTION	DESIGNATION
AE01A-P2X	CN1	Flow, return, condense sensor
AE01X	CN2	DHW sensor, DHW flow meter, water pressure sensor
AE01X	CN3	Underflow system overheat temperature
AE01X	CN4	RS232 PC interface
AE01X	CN5	Display board connection
AE01X	CN8	Unused
AE01X	CN9	Unused
AE01X	CN10	Unused

PCB	PLUG or CONNECTION	DESIGNATION
AE01X	J1	Earth
AE01X	J2	Unused
AE01X	J3	Incoming 230V supply, heat request
AE01X	J4	Unused
AE01X	J5	Unused
AE01X	J6	230V sparking transformer
AE01X	J7	Earth sparking transformer
AE01X	J8	230V pump
AE01X	J9	230V 3-way valve, supplementary external pump
AE01X	J10	230V gas valve
AEO1X	J12	Fume thermostat/Water overheat thermostat
AE01X	J11-J13-J14	Unused
AE01X	J15	Outside sensor

PCB	PLUG or CONNECTION	DESIGNATION
MOT2B	CN01	External transformer connection
MOT2B	CN02	Fan connection
MOT2B	CN03-CN04	Connection to main PCB

Strip	PLUG or CONNECTION	DESIGNATION
High voltage	M3	Incoming 230V supply
High voltage	M6	Heat request, 230V clock supply
High voltage	M2	Supplementary external pump
Low voltage	M10	Outside sensor, underflow system overheat temperature

PCB	PLUG or CONNECTION	DESIGNATION
Gas valve	OPE	Plug J3 on AE01X
Fan	F	Plug CN02 on MOT2B
Condense sensor	C.S.	Plug CN1 on AE01X
Flow sensor	F.S.	Plug CN1 on AE01X
Return sensor	R.S.	Plug CN1 on AE01X
Pump	P	Plug J8 on AE01X
External transformer	⊖	Plug CN01 on MOT2B
Hot water outlet sensor	DHWT	Plug CN2 on AE01X
External sensor (if fitted)	O.S.	Plug J15 on AE01X
Actuator	3W (M)	Plug J9 on AE01X
230V connection for time clock or room thermostat	R.T.	Plug J3 on AE01X
Flow meter	DHW F.S.	Plug J3 on AE01X
Water pressure sensor	WPS	Plug J3 on AE01X
Ignition transformer	TSC2	Plug J3 on AE01X

SECTION 9 - EXPLODED DIAGRAMS

Table 1

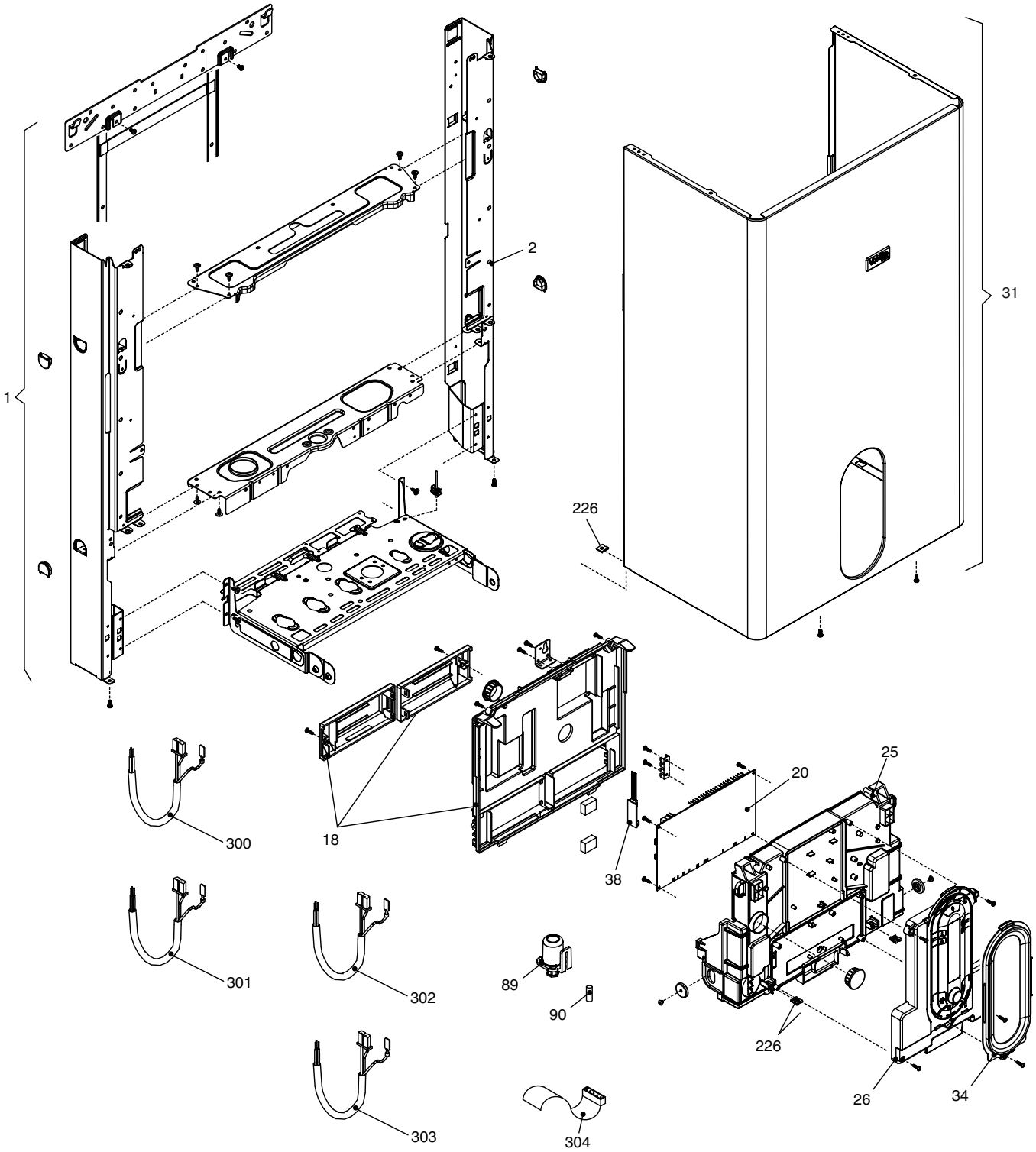

POS.	DESCRIPTION	Linea ONE
1	Frame assembly	R01005365
18	Cover assembly	R10026239
20	Printed circuit board	20016283
25	Cover	R10025842
26	Control panel	20029987
31	Case Assembly	20026589
34	Fixing flange	R10026671
38	Printed circuit board	20024205
89	Detector	R1582
90	Fuse	R3478
226	Clip	R5128
300	Electric connection band	R10026686
301	Wiring harness	R10026330
302	Wiring harness	20026587
303	Low tension cable	20016279
304	Electric connection band 8 ITRF06	R10026429

Table 2

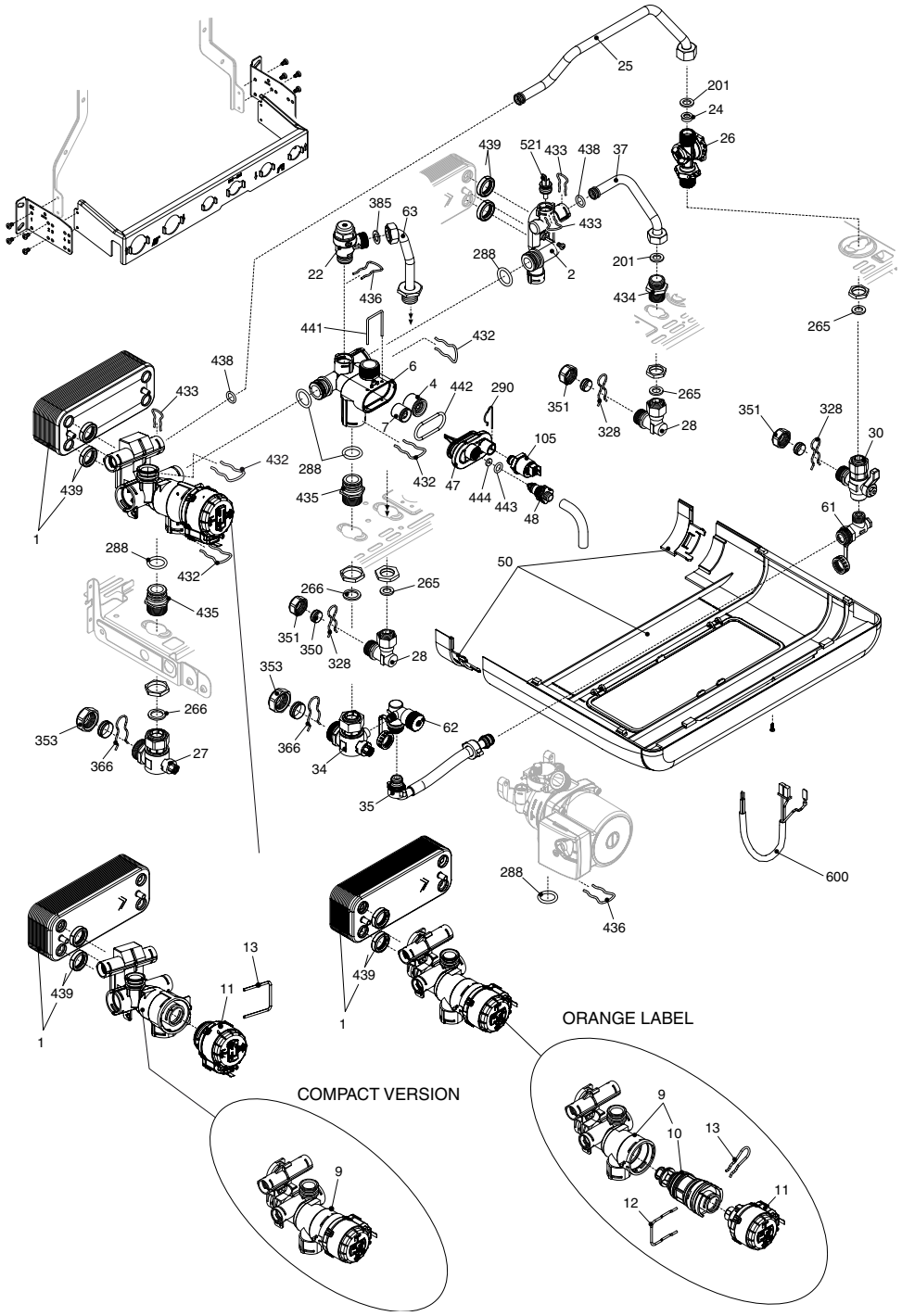

POS.	DESCRIPTION	Linea ONE	48	Cock	R10024646
1	Exchanger	R10023482	50	Cover	R10026384
2	Connection	R10030114	61	Non return valve	R10023569
4	Non return valve	R10025056	62	Cock	R10023568
6	By-pass casing	R10024641	63	Pipe	R10026228
7	Heating by-pass valve 2	0007783	105	Pressure transductor	20024559
9	3-way heating manifold and cartridge (Compact version)	20034037	201	Washer	R5026
9	3-way heating manifold and cartridge (Orange label)	R10026508	265	Washer	R5236
10	Cartridge (Compact version)	20034037	266	Washer	R5237
10	Cartridge (Orange label)	R10025305	288	Ring	R6898
11	Actuator (Compact version)	20017594	290	Clip	R2165
11	Actuator (Orange label)	20024841	351	Nut	R1823
12	Clip	R10025450	353	Nut	R1824
13	Clip (Compact version)	20017598	366	Clip	R1820
13	Clip (Orange label)	R10025449	432	Clip	R10024958
22	Safety valve	R10025055	433	Clip	R10024986
24	Flow governor	R10026046	434	Nipple	R10024985
24	Flow governor	R10026041	435	Fitting/union	R10025059
24	Flow governor	R10026042	436	Clip	R10025062
25	Pipe	R10025839	438	O ring	R10024988
26	Dhw actuator	20029985	439	Washer	R10025067
27	Heating cock	R1789	441	Clip	R10025063
28	Connection	R1790	442	O ring	R10025065
30	Cock	R10023567	443	O ring	R10025064
34	Cock	R10023566	444	Washer	R10025066
35	Flexible pipe	R10023570	521	NTC sensor	R10027351
37	Pipe	R10025840	600	Hydraulic control cable 20025883	
47	Cover for by-pass assembly	R10024643			

Table 3

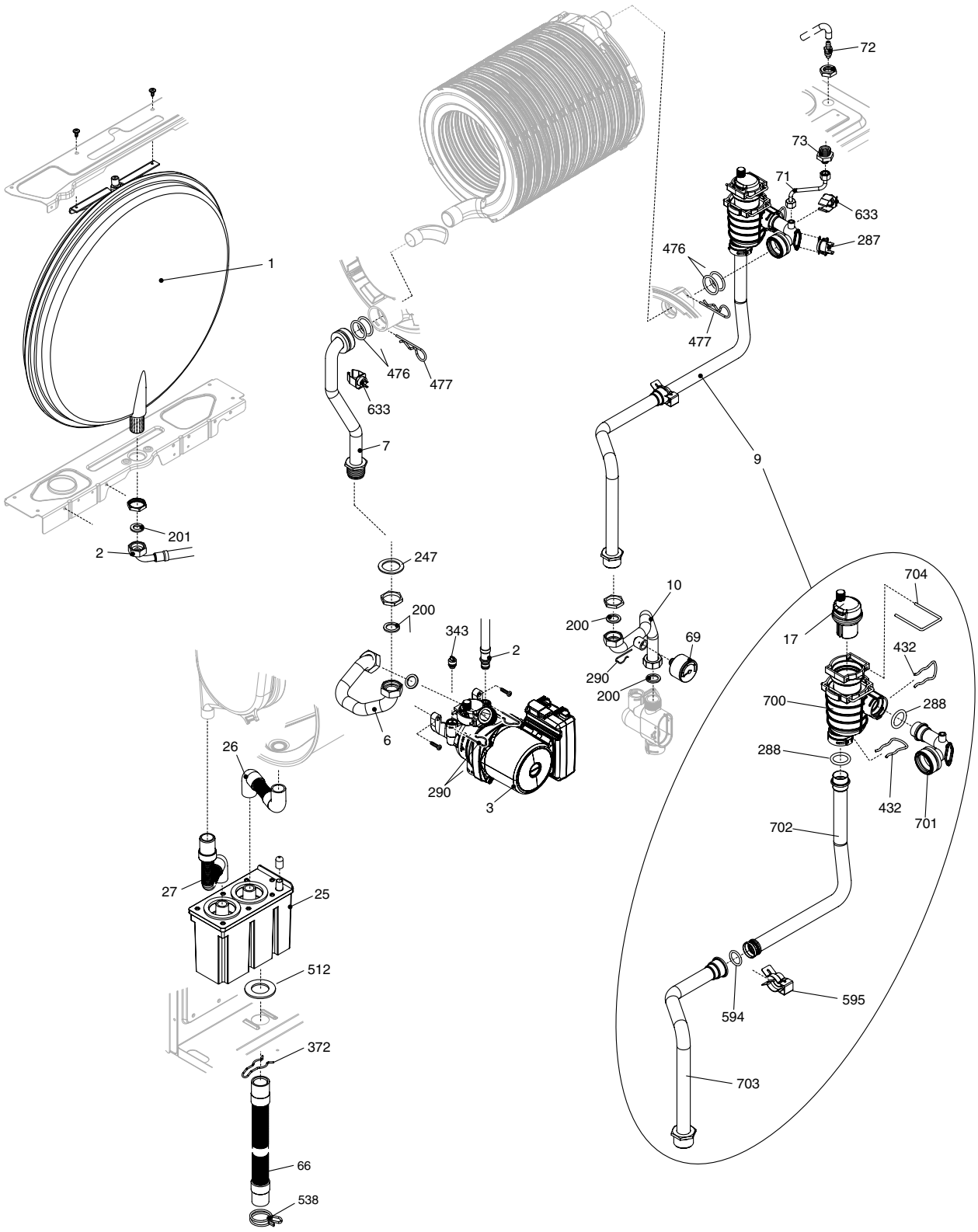

POS.	DESCRIPTION	Linea ONE
1	Expansion vessel	R2573
2	Pipe	R10025188
3	Pump	20025880
4	Air Vent bottle	R10025485
6	Pipe	R10026264
7	Pipe	R10026267
9	Pipe assembly	20020179
10	Pipe	20025881
17	Air vent valve	20019768
25	Condensate reservoir	R10028405
26	Flexible pipe	R10027191
27	Flexible pipe	R10027192
66	Flexible pipe	R10026272
69	Pressure gauge	R10027135
71	Pipe	20020178
72	Vent plug	R10023235
73	Cock	R10028431
200	Washer	R5023
201	Washer	R5026
247	Washer	R5203
287	High limit	R2258
288	Ring	R6898
290	Clip	R2165
343	Pump plug	R2216
372	Clip	R2588
432	Clip	R10024958
477	Split pin	R10026269
512	Washer	R10027193
594	O ring	20024869
595	Spring pipe	20024086
633	Water detector	20003819
700	Degasser kit	20019888
701	Pipe	20019764
702	Pipe	20019763
703	Pipe	20020192
704	Clip	20019767

Table 4

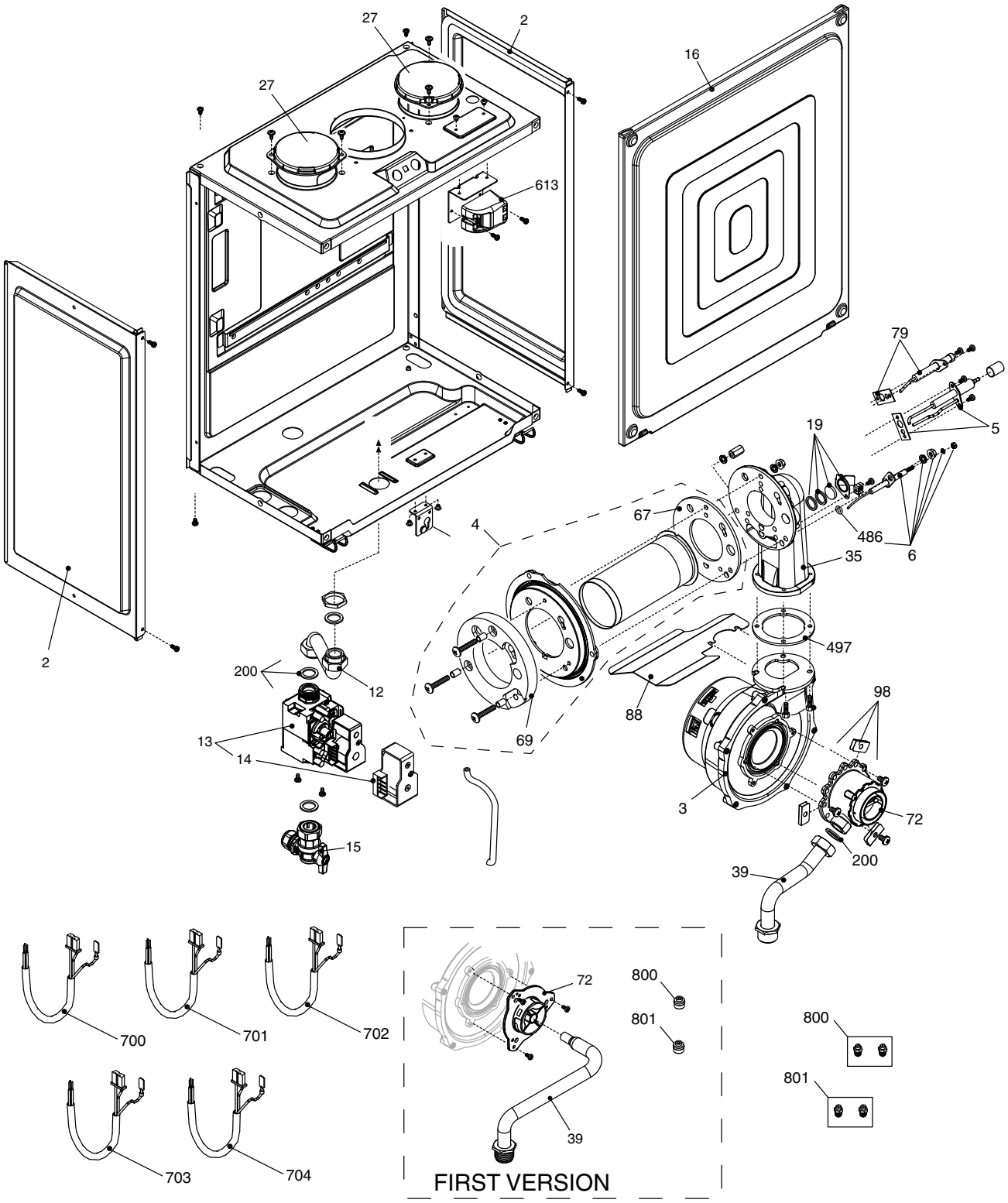

POS.	DESCRIPTION	Linea ONE
2	Air chamber side	R10026231
3	Fan	R10028456
4	Burner assembly	20016328
5	Spark / ignition electrode	R10027620
6	Condense electrode	R10026316
12	Gas pipe	R10026318
13	Gas valve	20039202
14	Gas valve solenoid	20040675
15	3/4" gas cock	R10020897
16	Air chamber access panel	R10026230
19	Burner observation port kit	R10026328
27	Hole cover	20005586
33	Washer	R8896
35	Air/gas manifold	R10028420
39	Pipe (first version)	R10028206
39	Pipe	20024600
67	Washer Ø 62	R10026322
69	Protection	20001003
72	Mixer red (first version)	20015932
72	Mixer	20031497
79	Flame sensor	R10028422
88	Blower heat shield	20006411
98	Mix spacer	20036990
200	Washer	R5023
486	O ring	R10026325
497	Washer	R10026796
613	Ignition transformer	20001563
700	Pump cable	20024202
701	Ignition flame wiring harness	20016280
702	Pump cable	20025884
703	Spark electrode cable	R10026558
704	Gas valve cable	R10026336
800	Ng conversion kit (first version)	R01005466
800	Ng conversion kit	20031414
801	LPG conversion kit (first version)	R01005448
801	LPG conversion kit	20031415

Table 5

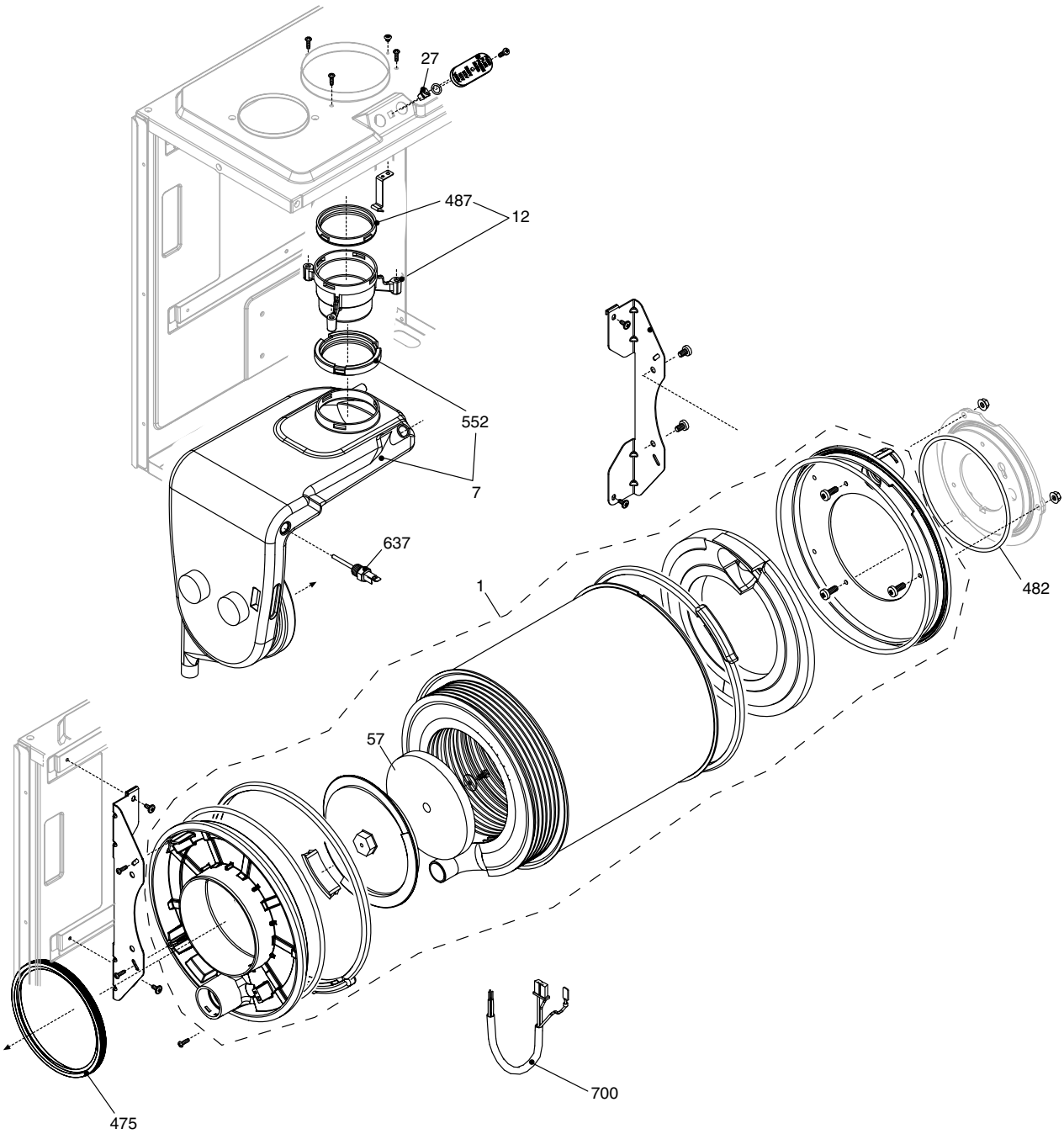

POS.	DESCRIPTION	Linea ONE
1	Condensing exchanger assembly	20024591
7	Conveyor	20007053
12	Flue drain connection	R10028421
27	Nut screw	R10020625
475	Outlet heat exch.seal gasket	R10026323
482	Inlet heat exch.seal gasket	R10026366
487	Washer Ø 60	R10026345
552	Washer Ø 60	R10028426
637	Flue sensor	20007050
700	Combustion cable	20016282

SECTION 10 - LPG INSTRUCTIONS

10.1 RELATED DOCUMENTS

BS 6798		**INSTALLATION OF BOILERS OF RATED INPUT NOT EXCEEDING 60 kW**
BS 5449	**PART 1**	**FORCED CIRCULATION HOT WATER SYSTEMS**
BS 5446		**INSTALLATION OF GAS HOT WATER SUPPLIES FOR DOMESTIC PURPOSES**
BS 5440	**PART 1**	**FLUES**
BS 5482	**PART 1**	**DOMESTIC BUTANE & PROPANE GAS BURNERS IN PERMAMENT DWELLINGS**

10.2 TECHNICAL DATA

Gas Pressures	Linea ONE
Inlet pressure	37.0 mbar
Maximum gas rate	2.33 kg/h
Minimum gas rate	0.30 kg/h
Nozzles size (quantity)	2 x Ø 3.25 mm
Fan speed @ max output (rpm) DHW	6.200
Fan speed @ max output (rpm) HTG	4.900
Fan speed @ min output (rpm)	1.800
Flue details (coaxial)	
Maximum horizontal flue length (60/100mm)	3.85
Maximum vertical flue length (60/100mm)	4.85
Flue details (twin pipes)	
Maximum horizontal flue length (80mm + 80mm)	30 + 30
Maximum vertical flue length (80mm + 80mm)	30 + 30
Efficiency	
SEDBUK (%)	A
Emissions	
NOx (max-min)	62 - 44 mg/kWh
CO (max-min)	183 - 21 mg/kWh
CO_2 (max-min)	10,0 - 10,0 %
CO/CO_2 ratio (max)	0,002 to 1
CO/CO_2 ratio (min)	0,0002 to 1

10.3 CONVERTING THE APPLIANCE GAS TYPE

To convert the appliance to another gas type it is necessary to change the burner injector and adjust the gas valve. It is also necessary to enter the appliance engineer mode and change the fan speed at the maximum output.

- To change the nozzles see 6.12.1
- To change parameters see 7.3.1
- To adjust CO_2 value see 7.4.1-2

10.4 GAS SUPPLY

The gas supply must be connected to the appliance by a competent LPG installer and must be of sufficient size to supply the appliance at its maximum output. An existing supply must be checked to ensure that it is of adequate size to deal with the maximum rated input of this and any other appliances that it serves.

10.5 GAS SUPPLY INSTALLATION

The entire installation including the meter must be purged and checked for gas tightness.

10.6 ADJUSTING THE GAS VALVE

THE GAS VALVE MUST BE SET-UP OR ADJUSTED WITH THE AID OF A PROPERLY CALIBRATED FLUE GAS ANALYSER.

Isolate the appliance from the electrical supply and remove the appliance casing as described in 4.7.1. Set the flue gas analyser to read CO_2 and insert the probe into the flue analysis test point (see fig. 1). Restore the electrical supply to the boiler and switch off the boiler. Push i and ⏻ buttons at the same time for 3 seconds to enter the adjusting menu. The display shows “CodE”. Select the adjusting password by turning the encoder and confirm it by pushing ENTER button.

10.6.1 MAXIMUM SETTING

Select the HH parameter by turning the encoder and confirm it by pushing ENTER button. The boiler starts at the maximum power, the CO_2 reading should be as shown in the table above.

If the CO_2 reading is correct, press the ENTER button to exit the maximum setting. If the CO_2 reading is incorrect, the maximum gas pressure must be adjusted as follows:

- using a suitable screwdriver, very slowly turn the maximum adjustment screw (see fig. 41) – clockwise to decrease, counter clockwise to increase – until the correct value is displayed on the CO_2 analyser (allow time for the analyser to stabilise).

IMPORTANT
A GAS TIGHTNESS CHECK MUST BE CARRIED OUT.

10.6.2 MINIMUM SETTING

Select the LL parameter by turning the encoder and confirm it by pushing ENTER button. The boiler starts at the minimum power, the CO_2 reading should be as shown in the table above.

If the CO_2 reading is correct, press the ENTER button to exit the minimum setting. If the CO_2 reading is incorrect, the minimum gas pressure must be adjusted as follows:

- using a suitable screwdriver, very slowly turn the minimum adjustment screw (see fig. 41) – clockwise to increase, counter clockwise to decrease – until the correct value is displayed on the CO_2 analyser (allow time for the analyser to stabilise).
- using the procedure detailed in 9.6.1, check that the maximum setting correct value is still being obtained. If not, repeat the above procedure.

GAS BOILER SYSTEM COMMISSIONING CHECKLIST

This Commissioning Checklist is to be completed in full by the competent person who commissioned the boiler as a means of demonstrating compliance with the appropriate Building Regulations and then handed to the customer to keep for future reference.

Failure to install and commission this equipment to the manufacturer's instructions may invalidate the warranty but does not affect statutory rights.

Customer Name _____ Telephone Number _____

Address _____

Boiler Make and Model _____

Boiler Serial Number

Commissioned by (print name) _____ CORGI ID Number _____

Company Name _____ Telephone Number _____

Company Address _____

_____ Commissioning Date _____

To be completed by the customer on receipt of a Building Regulations Compliance Certificate * :

Building Regulations Notification Number (if applicable)

CONTROLS **Tick the appropriate boxes**

Time and Temperature Control to Heating	Room Thermostat and Programmer/Timer ☐	Programmable Room Thermostat ☐	Load/Weather Compensation ☐	Optimum Start Control ☐
Time and Temperature Control to Hot Water	Cylinder Thermostat and Programmer/Timer ☐		Combination Boiler ☐	
Heating Zone Valves	Fitted ☐		Not Required ☐	
Hot Water Zone Valves	Fitted ☐		Not Required ☐	
Thermostatic Radiator Valves	Fitted ☐		Not Required ☐	
Automatic Bypass to System	Fitted ☐		Not Required ☐	
Boiler Interlock			Provided ☐	

ALL SYSTEMS

The system has been flushed and cleaned in accordance with BS7593 and boiler manufacturer's instructions Yes ☐

What system cleaner was used?

What inhibitor was used? Quantity ☐ litres

CENTRAL HEATING MODE **Measure and Record:**

Gas Rate	☐ m^3/hr	OR		☐ ft^3/hr
Burner Operating Pressure (if applicable)	☐ mbar	OR	Gas Inlet Pressure	☐ mbar
Central Heating Flow Temperature				☐ °C
Central Heating Return Temperature				☐ °C

COMBINATION BOILERS ONLY

Is the installation in a hard water area (above 200ppm)? Yes ☐ No ☐

If yes, has a water scale reducer been fitted? Yes ☐ No ☐

What type of scale reducer has been fitted?

DOMESTIC HOT WATER MODE Measure and Record:

Gas Rate	☐ m^3/hr	OR		☐ ft^3/hr
Burner Operating Pressure (at maximum rate)	☐ mbar	OR	Gas Inlet Pressure (at maximum rate)	☐ mbar
Cold Water Inlet Temperature				☐ °C
Hot water has been checked at all outlets		Yes ☐	Temperature	☐ °C
Water Flow Rate				☐ l/min

CONDENSING BOILERS ONLY

The condensate drain has been installed in accordance with the manufacturer's instructions and/or BS5546/BS6798 Yes ☐

ALL INSTALLATIONS

If required by the manufacturer, record the following CO_2 ☐ % OR CO ☐ ppm OR CO/CO_2 Ratio ☐

The heating and hot water system complies with the appropriate Building Regulations Yes ☐

The boiler and associated products have been installed and commissioned in accordance with the manufacturer's instructions Yes ☐

The operation of the boiler and system controls have been demonstrated to and understood by the customer Yes ☐

The manufacturer's literature, including Benchmark Checklist and Service Record, has been explained and left with the customer Yes ☐

Commi ssioning Engineer's Signature

Customer's Signature

(To confirm satisfactory demonstration and receipt of manufacturer's literature)

*All installations in England and Wales must be notified to Local Authority Building Control (LABC) either directly or through a Competent Persons Scheme. A Building Regulations Compliance Certificate will then be issued to the customer.

benchmark COLLECTIVE MARK
THE MARK OF QUALITY FOR THE INSTALLATION, COMMISSIONING AND SERVICING OF DOMESTIC HEATING AND HOT WATER SYSTEMS

©Heating and Hotwater Industry Council (HHIC)

www.centralheating.co.uk

SERVICE RECORD

It is recommended that your heating system is serviced regularly and that the appropriate Service Record is completed.

Service Provider

Before completing the appropriate Service Record below, please ensure you have carried out the service as described in the manufacturer's instructions.

Always use the manufacturer's specified spare part when replacing controls.

SERVICE 1 Date

Energy Efficiency Checklist completed? Yes ☐ No ☐

Engineer Name

Company Name

Telephone Number

CORGI ID Number

Comments

Signature

SERVICE 2 Date

Energy Efficiency Checklist completed? Yes ☐ No ☐

Engineer Name

Company Name

Telephone Number

CORGI ID Number

Comments

Signature

SERVICE 3 Date

Energy Efficiency Checklist completed? Yes ☐ No ☐

Engineer Name

Company Name

Telephone Number

CORGI ID Number

Comments

Signature

SERVICE 4 Date

Energy Efficiency Checklist completed? Yes ☐ No ☐

Engineer Name

Company Name

Telephone Number

CORGI ID Number

Comments

Signature

SERVICE 5 Date

Energy Efficiency Checklist completed? Yes ☐ No ☐

Engineer Name

Company Name

Telephone Number

CORGI ID Number

Comments

Signature

SERVICE 6 Date

Energy Efficiency Checklist completed? Yes ☐ No ☐

Engineer Name

Company Name

Telephone Number

CORGI ID Number

Comments

Signature

SERVICE 7 Date

Energy Efficiency Checklist completed? Yes ☐ No ☐

Engineer Name

Company Name

Telephone Number

CORGI ID Number

Comments

Signature

SERVICE 8 Date

Energy Efficiency Checklist completed? Yes ☐ No ☐

Engineer Name

Company Name

Telephone Number

CORGI ID Number

Comments

Signature

SERVICE 9 Date

Energy Efficiency Checklist completed? Yes ☐ No ☐

Engineer Name

Company Name

Telephone Number

CORGI ID Number

Comments

Signature

SERVICE 10 Date

Energy Efficiency Checklist completed? Yes ☐ No ☐

Engineer Name

Company Name

Telephone Number

CORGI ID Number

Comments

Signature

Vokèra
heating for life

RANGE RATED - EN 483

The max CH input of this boiler has been adjusted to_____ kW, equivalent to _____ rpm max CH fan speed.

Date___/____/____

Signature _____

Boiler serial number

_____

Cod. 20009457 - 07/11 - Ed. 0

Registered address:
Vokèra Ltd
Borderlake House
Unit 7 Riverside Industrial Estate
London Colney
Herts AL2 1HG

enquiries@vokera.co.uk

www.vokera.co.uk
www.vokera.ie

Sales, General Enquires
T 0844 391 0999
F 0844 391 0998

Vokèra Ireland
West Court, Callan
Co Kilkenny
T 056 7755057
F 056 7755060

Vokèra Limited reserve the right to change specification without prior notice
Consumers statutory rights are not affected.

A Riello Group Company.
Company Reg No: 1047779