Vokèra BY RIELLO

VERVE I 50

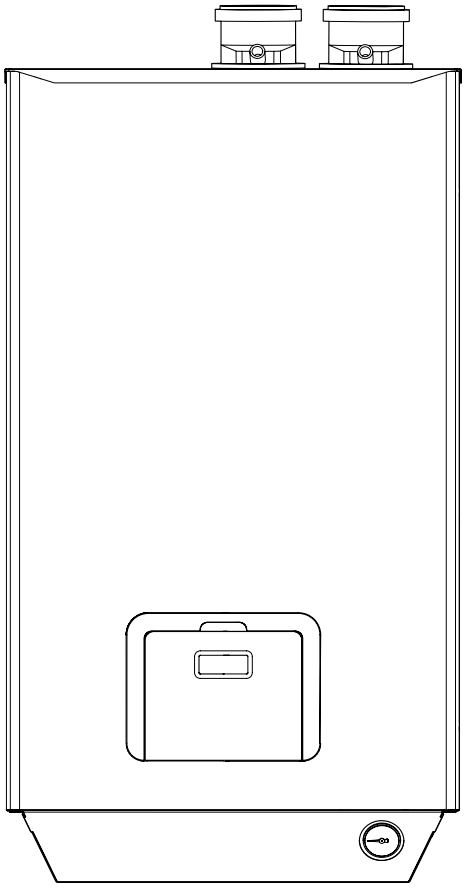

Installation & Servicing Instructions

CE

THESE INSTRUCTIONS
TO BE RETAINED
BY USER

benchmark
COLLECTIVE MARK
THE MARK OF QUALITY FOR THE INSTALLATION, COMMISSIONING AND SERVICING OF DOMESTIC HEATING AND HOT WATER SYSTEMS

Vokèra is a licensed member of the Benchmark scheme which aims to improve the standards of installation and commissioning of domestic hot water systems in the UK.

RANGE

MODEL	CODE
VERVE i 50	20117565

Dear Customer,
Thank you for choosing a **Vokera** boiler. You have purchased a modern, high efficiency, quality product that is designed to give dependable and safe service and to provide comfort in the home for many years to come. Arrange for your boiler to be serviced regularly by an authorised Technical Assistance Centre **Vokera**. Their personnel are specially trained to keep your boiler efficient and cheap to run. They also stock any original spare parts that might be required.
This instruction manual contains important instructions and precautions that must be observed to ensure the efficient functioning of your **VERVE i** boiler.

Please accept our renewed thanks for your purchase
Vokera

CONFORMITY

The boilers **VERVE i** are compliant with:
- Directive 2009/142/EC - Gas Appliances
- Directive 92/42/EEC on efficiency requirements and Annex E and Pres. Republic Decree n. 412, 26 August 1993 (****)
- Electromagnetic Compatibility Directive 2014/30/EU
- Low Voltage Directive 2014/35/EU
- Ecodesign Directive 2009/125/CE for energy-related products
- Energy Labelling Directive 2010/30/EU
- Delegated Regulation (EU) N. 811/2013
- Delegated Regulation (EU) N. 813/2013
- Standard for gas-fired heating boilers - General requirements and tests - EN 15502-1
- Specific standard for type C appliances and type B2, B3 and B5 appliances of nominal heat input not exceeding 1000 kW - EN 15502-2/1.

CE

The boilers also **VERVE i** meet the requirements contained in chapter R.3.B of the ISPESL "R" Collection. See the appendix.

CONTENTS

1 WARNINGS AND SAFETY 4
1.1 General Safety Information 4
1.2 Precautions 4

2 DESCRIPTION OF THE APPLIANCE 5
2.1 Description of the appliance 5
2.2 Functional elements of the appliance 6
2.3 Max. dimensions and connections 7
2.4 Water circuit 8
2.4.1 Water circuit without internal diverter valve 8
2.4.2 Water circuit with internal diverter valve 8
2.5 Control panel 9
2.6 Technical specifications 10
2.7 Pump 11
2.8 Multi-row wiring diagram 12

3 INSTALLATION 14
3.1 Installation standards 14
3.2 Requirements for proper installation 15
3.3 Eliminating the air from the heating circuit and boiler 15
3.4 Cleaning the system / characteristics of the heating circuit water 15
3.5 Positioning the boiler and making the hydraulic connections 16
3.6 Outdoor sensor installation 17
3.7 Electrical connections 18
3.7.1 Grounding system 18
3.7.2 Connection to the electrical power supply 18
3.8 Gas connections 18
3.9 Hydraulic diagrams 19
3.10 Evacuation of combustion products and air suction 24
3.10.1 "Forced open" installation (type B23P-B53P) . . . 24
3.10.2 "Airtight" installation (type C) 24
3.10.3 Use of old flue pipes 26
3.10.4 Preparation for the condensate drain 26
3.10.5 Filling the heating system 27
3.10.6 Emptying the heating system 27

4 IGNITION AND OPERATION 28
4.1 Preliminary operations 28
4.2 Turning the boiler on and off 28
4.3 Boiler operating modes 28
4.3.1 Domestic hot water temperature setting 28
4.4 Heating water temperature adjustment 29
4.4.1 Adjustment without an external climate control probe (optional) 29
4.4.2 Adjustment with an external climate control probe 30
4.5 Monitoring the boiler 30
4.5.1 Boiler operating status 30
4.5.2 Temperatures set by the user 31
4.5.3 Monitor function 31
4.5.4 Error messages 32
4.6 Adjustments 33
4.7 Changing Gas - Methane-LPG transformation . . 34

5 MAINTENANCE 35
5.1 Routine maintenance 35
5.2 Extraordinary maintenance 35
5.3 Checking the combustion parameters 35

6 PROGRAMMING 36
6.1 Installer Level 36
6.2 Factory Level 36
6.3 Monitor Level 36
6.4 Parameter List 37

The following symbols are used in this manual:

⚠ **CAUTION! =** Identifies actions that require caution and adequate preparation.

⛔ **STOP! =** Identifies actions that you MUST NOT do.

This manual, Code 2012222 - Rev. 3 (07/17) comprises 40 pages.

1 WARNINGS AND SAFETY

1.1 General Safety Information

⚠ The boilers manufactured in our factories are checked even in the smallest details in order to protect users and installers against possible injury. After working on the product, qualified personnel must check the electrical wiring, in particular the stripped part of leads, which must not protrude from the terminal board and avoiding possible contact with live parts of the leads themselves.

⚠ This instruction manual is an integral part of the product. It must be kept safe and must ALWAYS accompany the product, even if it is sold to another owner or transferred to another user or to another installation. If you lose this manual, order a replacement immediately.

⚠ The boiler must only be installed and serviced by qualified personnel, in accordance with Ministerial Decree 37 of 2008 and the UNI-CIG 7129-7131 and UNI 11071 standards, as amended.

⚠ The product must be serviced at least once a year. Servicing must be arranged in advance with the **Vokera** Technical Assistance Centre.

⚠ The boiler **VERVE i** must be installed inside a suitable room (boiler room).

⚠ The installer must instruct the user about the operation of the appliance and about essential safety regulations.

⚠ In order to take advantage of the boiler's automatic antifreeze protection, based on the burner's functionality, the boiler must be able to switch itself on. This means that any lockout condition (e.g. lack of gas/ electricity supply, or safety device intervention) will deactivate the protection.

⚠ This product must only be used for the purpose for which it is designed and made, as specified by **Vokera**. **Vokera** declines all responsibility, contractual or other, for damage to property or injury to persons or animals caused by improper installation, adjustment, maintenance or use.

⚠ After removing the packaging, check the condition and completeness of the supply. If there are any problems, contact the company **Vokera** that sold the equipment.

⚠ The safety valve outlet must be connected to a suitable collection and venting system. The manufacturer declines all liability for any damage caused due to any intervention carried out in the safety valve.

⚠ The seal of the condensate drainage connection line must be guaranteed, and the line must be well protected against the risk of freezing (e.g. by insulating it).

⚠ Dispose of all the packaging materials in the suitable containers at the corresponding collection centres.

⚠ When disposing of waste, be careful not to harm human health or employ procedures or methods which may damage the environment.

⚠ During installation, inform the user that:
- in the event of a water leak, it is necessary to shut off the water supply and immediately notify the Technical Assistance Centre
- it is necessary to periodically verify that the water system's pressure is correct. If necessary, load the system as explained in the "Filling the heating system" chapter
- if the boiler is not used for a long period of time, it is recommended to perform the following operations:
  - turn the main appliance switch and the main system switch to their "off" positions
  - Close the fuel and water valves for the heating and domestic hot water system
  - empty the heating and domestic hot water circuits to prevent freezing.

⚠ These boilers heat water at a temperature below boiling point at an atmospheric pressure level. They must be connected to a heating system suitable for their output and performance.

⚠ **At the end of its life, the product should be not be disposed of as solid urban waste, but rather it should be handed over to a differentiated waste collection centre.**

1.2 Precautions

For safety purposes, always remember to:

⛔ Do not allow children or infirm persons to operate the system unsupervised.

⛔ It is forbidden to use electrical devices or equipment, such as switches, appliances, etc. if there is a smell of gas or un-burnt products. If so:
- Ventilate the room, opening doors and windows
- Close the main gas valve
- Request the immediate intervention of the Technical Support Service **Vokera** or other professionally qualified personnel.

⛔ Do not touch the boiler while barefoot or wet.

⛔ Never clean or service the boiler without first disconnecting it from the mains electricity supply by turning the mains power switch and the control panel switch OFF.

⛔ Do not tamper with or adjust the safety or control devices without prior authorisation and instructions from the manufacturer.

Never pull, disconnect, or twist the electrical cables coming from the appliance even if it is disconnected from the mains electricity supply.

It is prohibited to cover or reduce the size of the ventilation openings in the room where the boiler is installed.

Do not expose the boiler to the elements. It is designed to work indoors.

Do not store containers of flammable substances in the room where the boiler is installed.

Do not dispose of packaging material into the environment, or leave it within the reach of children, since it can become a potential hazard. Dispose of packaging material in compliance with applicable legislation.

It is forbidden to obstruct the condensate outlet.

2 DESCRIPTION OF THE APPLIANCE

2.1 Description of the appliance

VERVE i is a wall-mounted, high-power, heating-only condensing boiler that's capable of operating under various conditions:

SCENARIO A
Heating only. The boiler does not supply domestic hot water.
SCENARIO B
Heating only, with the connection of an external storage tank (managed by a thermostat) for domestic hot water preparation (factory configuration).
SCENARIO C
Heating only, with the connection of an external storage tank (accessory kit available upon request) managed by a temperature probe, for domestic hot water preparation. When connecting the storage tank (not supplied), check the NTC probe has the following characteristics: 10 kOhm at 25°C, B 3435 ±1%.

Based on the selected installation type, it is recommended to refer to the operations for selecting the domestic hot water operating mode described in section "Domestic hot water temperature setting".
This appliance's electrical and water systems can be connected to a remote storage tank; in this case, the quantity of domestic hot water will depend not only on the boiler output but also on the storage tank capacity. This type of unit can be installed inside a suitable room (boiler room). Depending on the flue gas discharge accessory used, it is classified in the following categories: B23P; C13, C13x; C33, C33x; C43, C43x; C53, C53x; C63, C63x; C83, C83x. In B23P configuration, the unit cannot be installed in bedrooms, bathrooms, shower rooms, or any rooms containing open chimneys without their own air intake vents.

The room where the boiler is installed must have proper ventilation.

Detailed regulations for the installation of the flue, gas piping and ventilation ducting are given in Standards UNI-CIG 7129-7131 and UNI 11071.
The main **technical characteristics** of the appliance are:
- low-emission premix burner
- microprocessor card to control inputs, outputs and alarm management
- continuous electronic flame modulation in heating mode
- electronic ignition with flame ionisation control
- direct current fan controlled by a Hall-effect revolutions counter
- built-in gas pressure stabiliser
- NTC probe to control delivery temperature of the primary circuit
- NTC probe to control return temperature of the primary circuit
- device for automatic air separation and purging
- 3-way valve with electric actuator (optional)
- NTC probe for monitoring the flue gas discharge temperature
- hydrometer to visualise heating water pressure
- circulator anti-blocking device
- airtight combustion chamber
- electrically operated gas valve with dual shutter to command the burner
- external thermoregulation probe (optional)
- variable speed circulator (PWM= Pulse-Width Modulation)
- possibility of managing the direct zone and mixed zone downstream of the water separator with a standard device installed inside the boiler.

The appliance's **safety devices** consist of:
- a water limit thermostat, to check for any overheating of the appliance and thereby ensure the 100% safety of the system. To restore functionality in the event of a thermostat intervention, simply press the reset button on the boiler's control panel
- flue gas probe: this intervenes (putting the boiler in safety stop mode) if the temperature of the combustion products exceeds the maximum operating temperature of the discharge pipes
- 3,5 bar safety valve
- a microprocessor check of probe continuity, with any faults indicated on the display
- a syphon with float, for discharging the condensate and preventing the leakage of flue gases
- anti-freeze function
- diagnosis for absence of circulation (via the display of the temperatures read by the delivery and return probes)
- a differential pressure switch that allows the burner to ignite if a minimum level of water circulation is guaranteed in the primary circuit heat exchanger
- low water conditions detected via the pressure sensor
- a flue gas safety evacuation system incorporated in the pneumatic operation of the gas valve
- overheating diagnoses performed on both the delivery and return lines, with a dual probe
- fan monitoring performed via a Hall-effect revolutions counter: the fan's rotation speed is constantly monitored.

2.2 Functional elements of the appliance

VERVE i 50

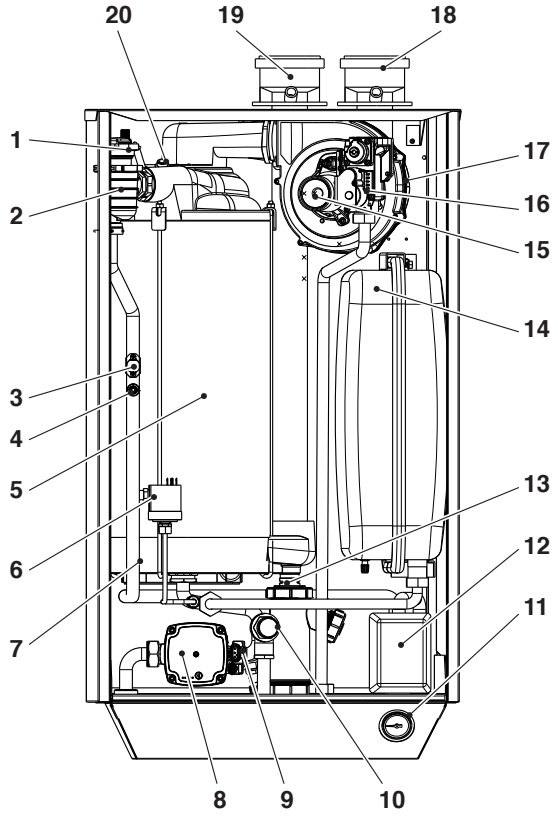

1 Air vent valve
2 Water/air separator
3 Safety thermostat
4 CH flow temperature sensor
5 Exchanger
6 Diff. Pressure switch
7 Exhaust flue probe
8 Pump
9 Return probe
10 Safety valve
11 Water pressure gauge
12 Diverter valve (optional)
13 Condensate outlet
14 Primary expansion tank (optional)
15 Venturi tubes
16 Gas valve
17 Fan
18 Air inlet
19 Exhaust flue duct
20 Ignition/detection electrode

Fig. 1

Vokèra

2.3 Max. dimensions and connections

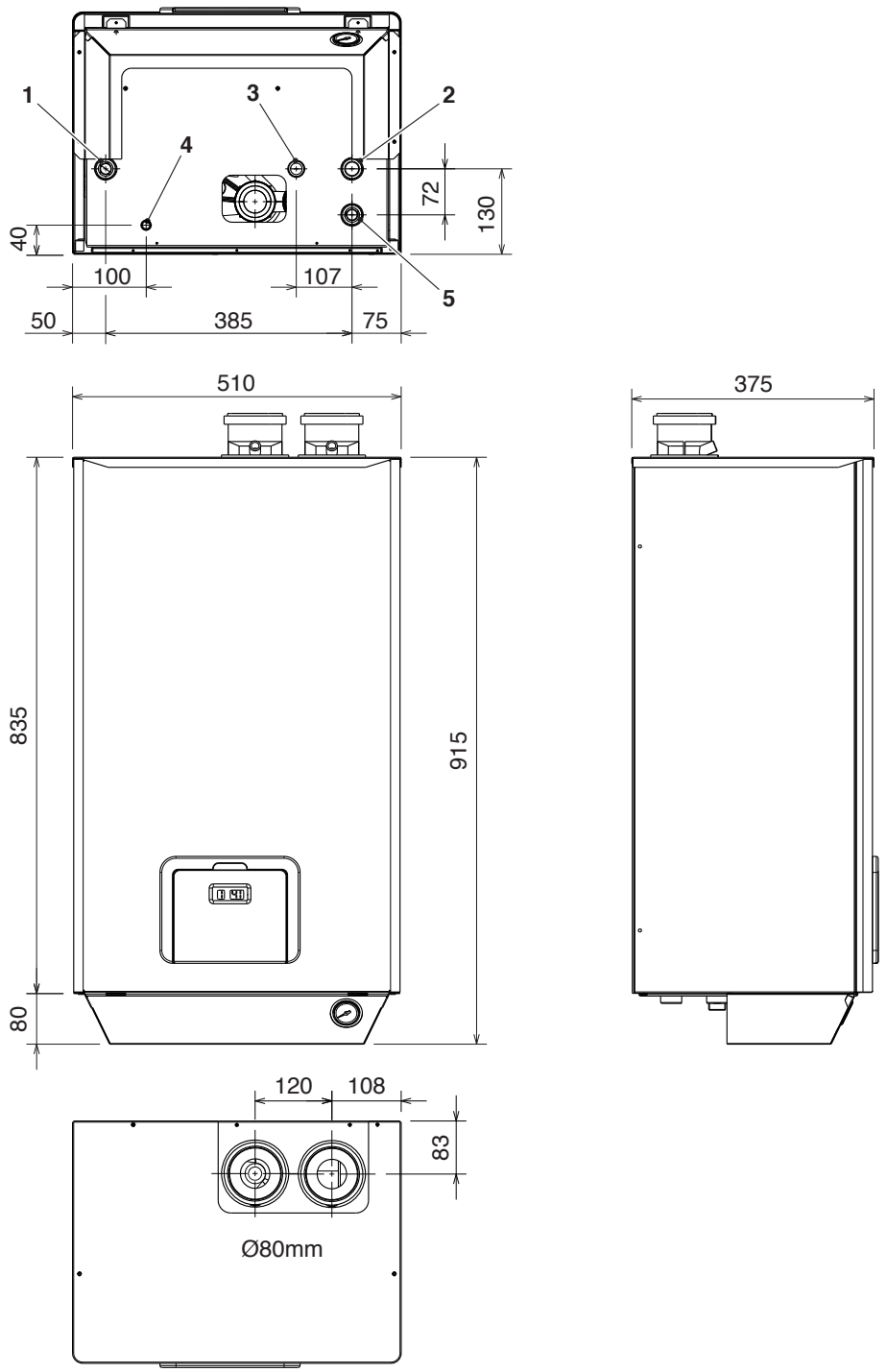

Fig. 2

1 Central heating return
2 Central heating flow
3 Gas fitting
4 Condensate outlet Ø18

(see chapter Preparation for the condensate drain)

2.4 Water circuit

2.4.1 Water circuit without internal diverter valve

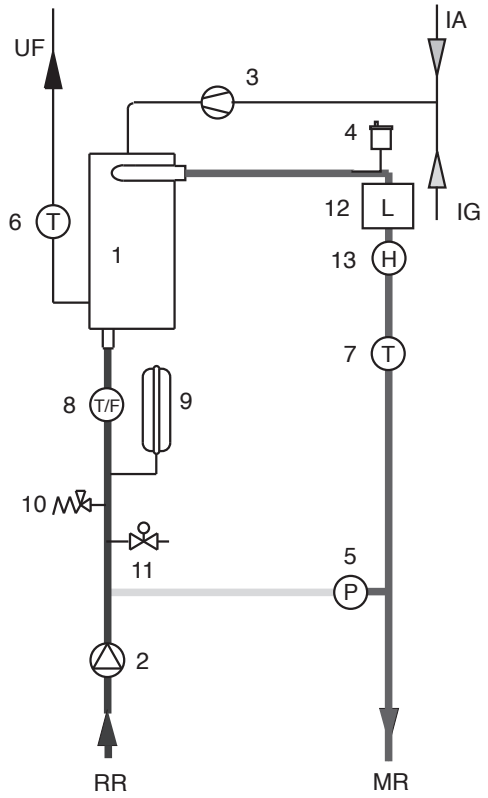

1 Exchanger
2 Pump
3 Fan
4 Air vent valve
5 Differential/minimum pressure switch
6 Flue gas temperature probe
7 Heating probe (delivery)
8 Heating probe (return)
9 Internal expansion tank (optional)
10 3,5 bar safety valve
11 Drain cock
12 Water/air separator
13 Safety thermostat

Fig. 3

2.4.2 Water circuit with internal diverter valve

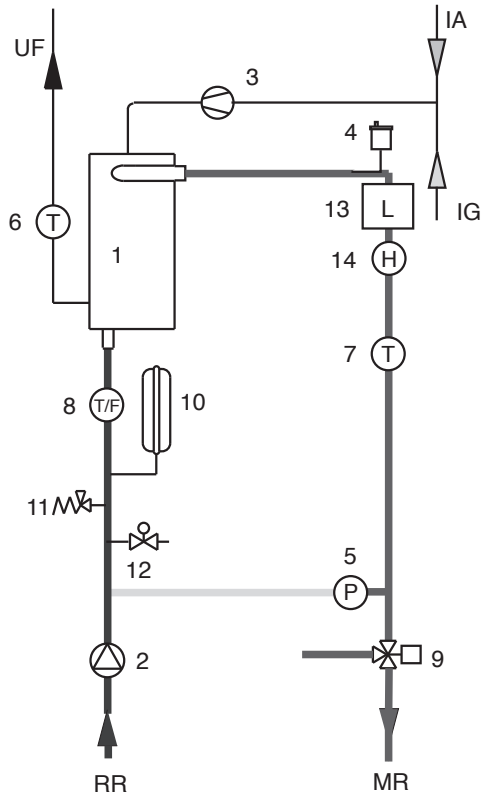

1 Exchanger
2 Pump
3 Fan
4 Air vent valve
5 Differential/minimum pressure switch
6 Flue gas temperature probe
7 Heating probe (delivery)
8 Heating probe (return)
9 Internal diverter valve
10 Internal expansion tank
11 3,5 bar safety valve
12 Drain cock
13 Water/air separator
14 Safety thermostat

Fig. 4

Vokèra

2.5 Control panel

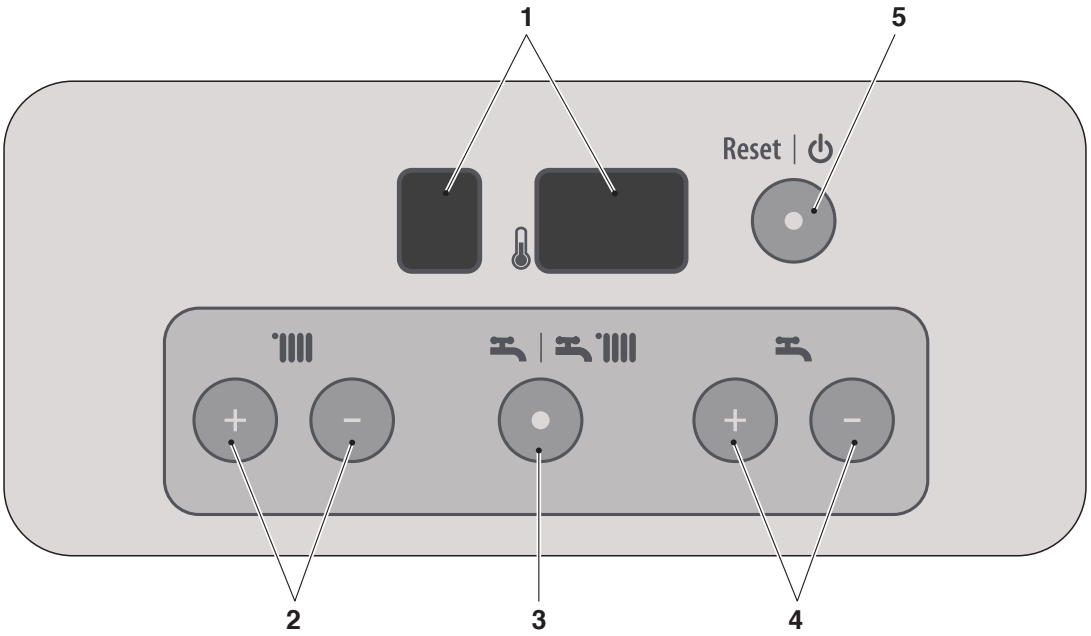

Fig. 5

1 Display
2 Heating temperature up/down buttons
3 Summer/winter button
4 Domestic hot water temperature up/down buttons
5 ON/OFF and RESET button

2.6 Technical specifications

Description	VERVE i 50	
Certifications		
Boiler typology	C13, C13x; C33, C33x; C43, C43x; C53, C53x; C63, C63x; C83, C83x	
CE certification no	0085AQ0713	
Encumbrances		
Height x Width x Depth	915 x 510 x 375	mm
Loadless boiler weight	55	kg
Water capacity	4,8	l
Delivery/Return/Gas connections	1”-1”-3/4”	
Flue gas discharge (twin)	80	mm
Power and efficiency		
Maximum rated heat input Hi/Hs	45,0/50,0	kW
Minimum rated heat input Hi/Hs	13,5/15,0	kW
Nominal power supplied to the water (80°C - 60°C)	44,20	kW
Nominal power supplied to the water (50°C - 30°C)	48,50	kW
Efficiency at 100% nominal power (80°C - 60°C)	98,20	%
Efficiency at 30% nominal power (80°C - 60°C)	98,70	%
Efficiency at 100% nominal power (50°C - 30°C)	107,70	%
Efficiency at 30% nominal power (50°C - 30°C)	108,70	%
Fuel and power supply		
Fuels		
Gas intake flow rate at nominal pressure G20/G30/G31	4,77/3,63/3,57	mc-kg/h
Electrical power supply/Electrical insulation rating		
Fan power consumption	100	W
Circulator power consumption	60	W
Combustion data		
Combustion efficiency at Nominal power (80°C - 60°C)	98,7	%
Combustion efficiency at Nominal power (50°C - 30°C)	99,1	%
Flue heat loss with burner on at 100% Nominal power (80 - 60°C)/(50 - 30°C)	1,3/0,9	%
Chimney and skirt losses with burner off	0,1	%
Casing heat loss with the burner on at 100% Nominal power	0,5	%
Flue gas temperature at maximum heat input	Return T° + max 5°C	°C
Flue gas flow rate at maximum/minimum heat input	72,51/23,2	Kg/h
Residual flue gas discharge head at Nominal power (meq per D80 mm)	490/50	Pa/meq
CO_2 at maximum/minimum heat input (G20)	9,0-9,2	%
CO at maximum/minimum heat input	64/8	ppm
NOx at maximum/minimum heat input	24/10,7	ppm
NOx Class	V (fifth)	
Heating system		
Min/max settable temperature	10/80	°C
Max operating pressure	3,5	bar
Residual water discharge head at 1000 l/h	0,6	bar
Hourly condensate production at 100% Nominal power (50°C - 30°C)	6,6	l/h

Product efficiency characteristics:

Description	VERVE i	
	50	
Maximum rated heat input	50	kW
Minimum rated heat input	15	kW
Domestic hot water maximum rated thermal input (80-60)		kW
Domestic hot water minimum rated thermal input (80-60)		kW
Parameter		
Seasonal heating energy efficiency class	A	-
Rated input	44,2	kW
Seasonal energy efficiency in central heating mode	92,5	%
useful heat output		
at rated thermal input and at high temperature rating	44,2	kW
at 30% of rated thermal input and at low temperature rating	16,3	kW
Efficiency		
at rated thermal input and at high temperature rating	88	%
at 30% of rated thermal input and at low temperature rating	98	%
Auxiliary electric consumption		
at full load	80	W
at partial load	24	W
in stand-by	2	W
Other parameters		
Heat losses in standby	442	W
Annual energy consumption	94,2	GJ
Level of inner sound power	58,2	dB
Emissions of nitrogen oxides	38,5	mg/kWh
For combined heating appliances		
Declared load profile		

2.7 Pump

The boilers **VERVE i** come equipped with high-efficiency modulating circulators, with the electrical and water connections already complete.

Thanks to the new electronic circuit board installed on the boiler, this circulator is capable of operating in both modulating and fixed mode, with the latter offering three speeds:
- fixed mode at low speed
- fixed mode at normal speed
- fixed mode at maximum speed.

By default, the unit is set to operate in modulating mode. In this case, when activated by the system, the pump starts at maximum speed, and modulates after 1 minute until the required ΔT target has been reached.
The boiler is equipped with an anti-blocking system, which activates an operating cycle after every 24 hours of disuse, regardless of the mode selector's position.

⚠ The "anti-blocking" function is only enabled if the boilers are receiving electrical power.

⚠ It is strictly forbidden to operate the circulator without water.

⚠ A minimum flow rate of 800l/h must be guaranteed within the boiler in order to prevent the differential pressure switch from being triggered.

The curve of the head available for the system, depending on the water flow rate, is shown below (the boiler's load losses have already been calculated).
The indicated flow rates refer to the range of possible species.
In fact, the modulating circulator can adjust the speed in order to obtain a constant temperature difference between the delivery and return lines, as well as to always obtain the maximum efficiency.

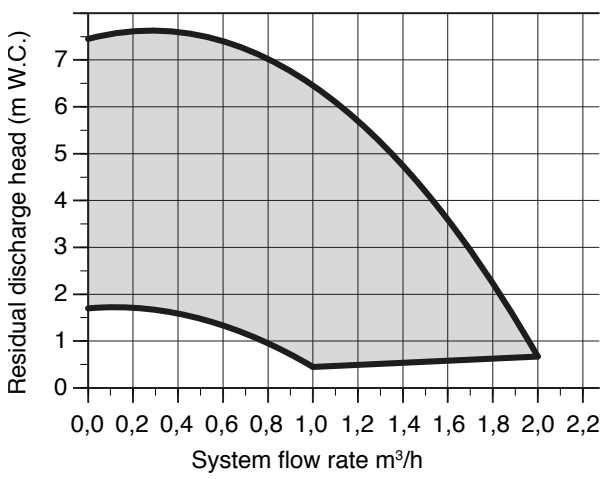

Fig. 6

2.8 Multi-row wiring diagram

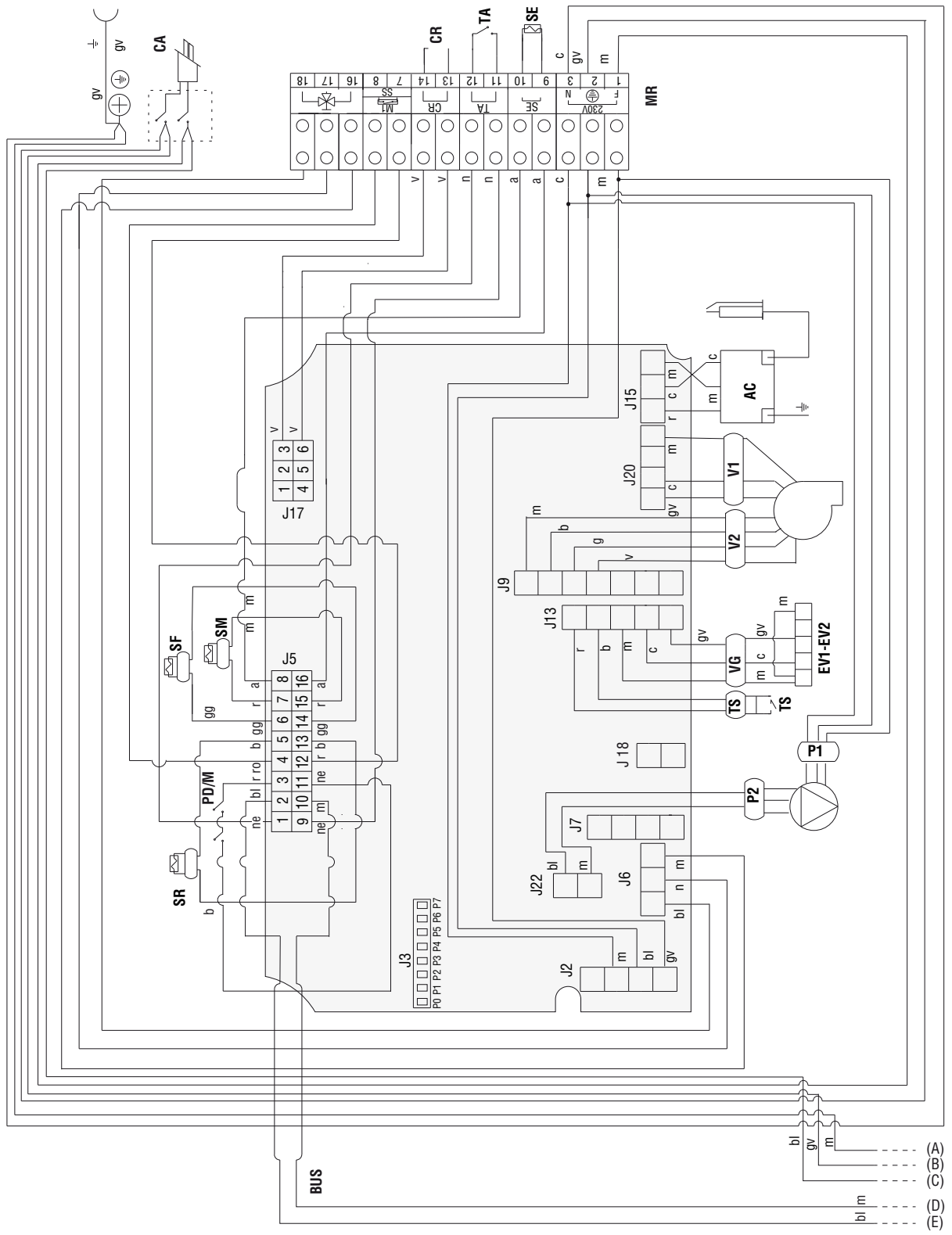

Fig. 7

Cable colours:

b	white	**ro**	pink
bl	blue	**r**	red
g	yellow	**v**	green
gg	yellow		
gv	yellow-green		
a	orange		
m	brown		
n	black		

Key:

AC igniter
CA power cable
CR Remote control
EV1, EV2 gas solenoid
MR terminal board
P1, P2 modulating circulator
SE external probe (optional)
SF flue gas probe
SR return probe
SS domestic hot water probe
TA ambient chronothermostat (opt.)
TP pressure transducer
TS safety thermostat
V1, V2 fan
SM delivery probe

Vokèra

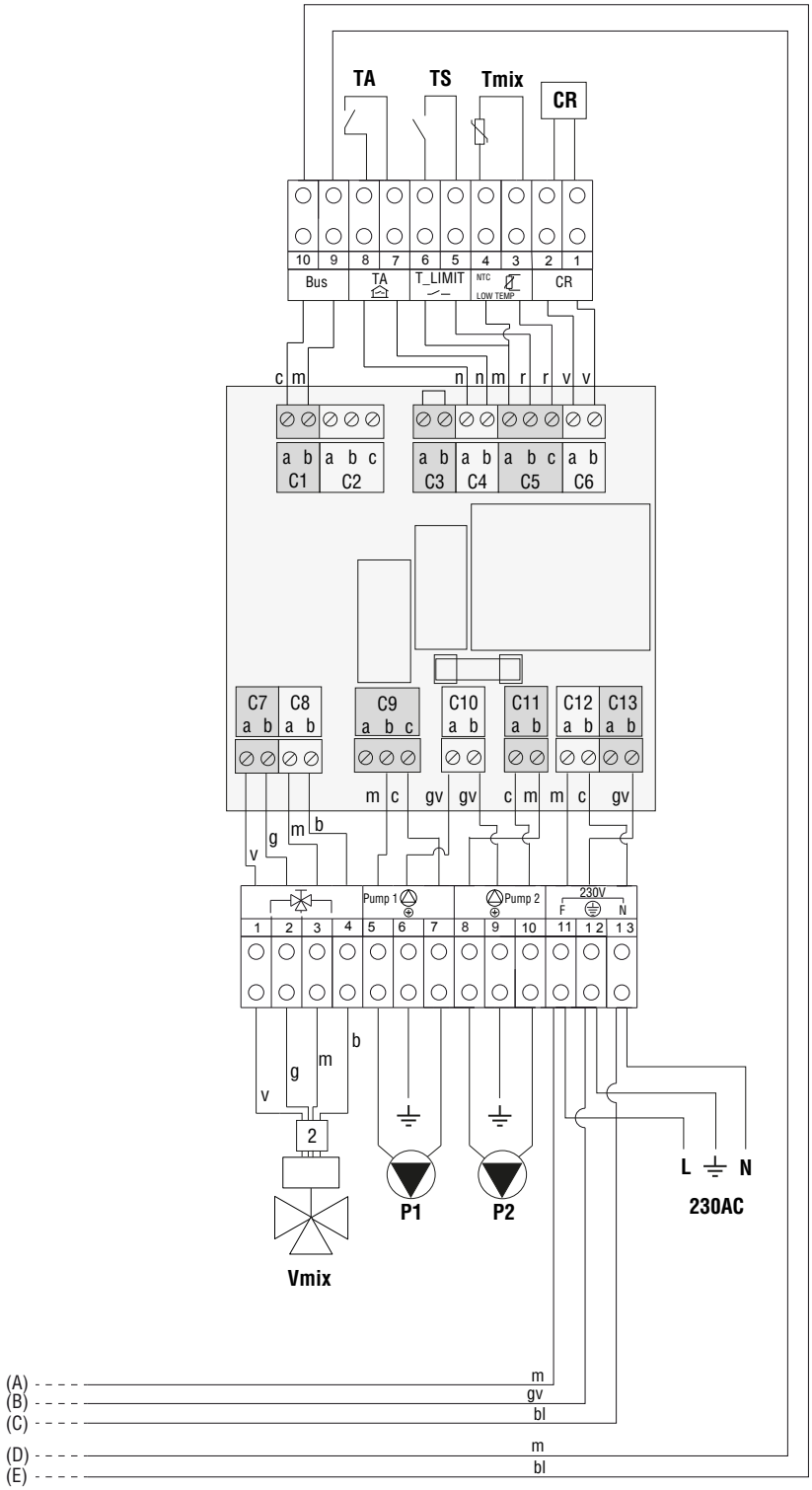

Fig. 8

Cable colours:

b white
bl blue
g yellow
gg yellow
gv yellow-green
a orange
m brown
n black
ro pink
r red
v green

Key:

P1 high-temperature system pump
P2 low-temperature system pump
CR open-therm remote control
Tmix Low temperature system NTC probe
TA ambient thermostat
TS Low temperature limit thermostat
Vmix Mixer valve 24 Vac (Multi temperature kit Cod. 20128368)
BUS boiler board connection

3 INSTALLATION

3.1 Installation standards

The installation must be carried out by qualified personnel, in compliance with the following reference standards:
- UNI-CIG 7129
- UNI-CIG 7131
- UNI 11071
- CEI 64-8

Always comply with local standards of the Fire Department, the Gas Company and with possible municipal dispositions.

Positioning
The **VERVE i** are wall-mounted boilers that can be installed:
- in indoor locations, even adjacent to the relative building, positioned in covered areas, provided that they are structurally separate and do not have any common walls, or else on the flat roof of the relative building, again without any common walls. The boiler can operate in a temperature range from -15°C to +60°C. For details please refer to the "Frost protection" section. All the optional kits that can be connected to the boiler must be protected on the basis of their electric protection level.
- in buildings intended for other uses, or in rooms included within the volume of the relative building. These rooms must be exclusively reserved for the heating systems.

WARNING
The installation of appliances powered by gas with a density greater than 0,8 (L.P.G.) is only permitted in above-ground rooms, even adjoining other above-ground rooms. In both cases the walking surface must not have any depressions or sunken areas, as these could create potentially hazardous pockets of gas.

There are two categories, based on the type of installation:
1 Type B23P-B53P boilers (forced open installation), with discharge pipe and combustion air extraction from the installation area. If the boiler is not installed outdoors, air intake in the installation area is compulsory.
2 Type C13, C13x; C23; C33, C33x; C43, C43x; C53, C53x; C63, C63x; C83, C83x boiler: appliance with airtight chamber, with flue gas discharge pipe and pick-up of combustion air from outside. It does not require an air intake point in the installation area. This type MUST be installed using concentric pipes, or other types of discharge designed for condensation boilers with an airtight chamber.

Minimum distances
The distances between any external points of the boiler and the vertical and horizontal walls of the room must allow for access to the adjustment, safety, and control devices, as well as ordinary maintenance operations.

In order to ensure the proper positioning of the appliance, the following points must also be taken into consideration:
- - it must not be placed above a cooker or other cooking device
- - it is forbidden to leave inflammable products in the room where the boiler is installed
- any heat-sensitive walls (e.g. wooden walls) must be protected with proper insulation.

Aeration and Ventilation of the installation areas
The installation areas must have one or more permanent ventilation openings on the exterior walls. The ventilation openings may be protected using metal grates, mesh and/or rain covers, provided that the net area of the ventilation opening is not compromised.
The ventilation openings must be created and positioned in such a way as to prevent the formation of pockets of gas, independently of the cover's shape.

Ventilation for installation in buildings intended for other uses, or in rooms included within the volume of the relative building
The ventilation area must not be less than 3000 cm^2 in the case of natural gas, and must not be less than 5000 cm^2 in the case of L.P.G.
Refer to the Italian Ministerial Decree of 12 April 1996 for further indications.

IMPORTANT
Before installation, wash every system piping carefully in order to remove any residues that may impair the operation of the appliance.
Under the safety valve, install a water collecting funnel with a relative drain in the event of any leaks due to excessive heating system pressure
Prior to ignition, make sure that the boiler is designed to operate with the gas available; this can be checked by the wording on the packaging and by the adhesive label indicating the gas type.
It is very important to highlight that in some cases the smoke pipes are under pressure, so the joints of the various elements must be airtight.

Frost protection
The electronic devices that manage the heating unit come with an anti-freeze function. When the delivery temperature drops below a certain minimum value, the burners are activated at the minimum power level, based on the operating parameters.

⚠ In order for the anti-freeze system to function properly, however, the electrical power and gas supplies must be present, and the water circuit must be properly pressurized.

If deemed necessary by the designer, glycol can be added to the circuit (up to a maximum of 50%), keeping in mind that this will result in significant losses in efficiency, as it alters the specific heat of the fluid itself.
Furthermore several parts of the system could be damaged by altering the pH.

3.2 Requirements for proper installation

The **VERVE i** boiler's particular characteristics guarantee significant advantages during both the installation and operating phases, provided that certain measures are taken beforehand.
In order to facilitate the entire installation procedure and avoid the need for future changes or adjustments, the following pages illustrate all the recommendations to be respected for the **VERVE i** boiler's proper installation, which must be carried out by a professional installer, in order to ensure the user's complete satisfaction.

System cleaning
This preventive measure is rendered absolutely necessary when replacing a heat generator on a pre-existing system, but is nevertheless also recommended to be performed on new systems in order to remove any waste, impurities, processing residues, etc.

To clean the system, if the old generator is still present in the system:
- add a descaling additive to the system's water;
- Have the system operate with the generator ON for approximately 7 days;
- Discharge the system's dirty water and wash the system once or several times using clean water.
- If the system is very dirty, repeat the last procedure one more time.

If the old generator is not present or not available, use a pump to circulate the water with the additive within the system for approximately 10 days, and then perform the final washing procedure, as described under the previous point.
Once the cleaning operations have been completed, it is recommended to add a protective liquid to the system's water before installing the boiler.

The warranty slip endorsed during the course of commissioning will have to be produced for any servicing required during the guarantee period. The manufacturer shall not be held liable for any damages caused by mishandling, improper use or errors in installation, use and maintenance work on the appliance. In the event of breakdown or malfunction switch off the appliance, avoiding to make any attempt to repair it and contact the Technical Assistance Centre.

3.3 Eliminating the air from the heating circuit and boiler

During the initial installation phase, or in the event of extraordinary maintenance, you are advised to perform the following sequence of operations:
1 Open the air vent valve (A) on the delivery pipe. Connect the tube (supplied with the boiler) to the valve, so the water can be drained into an external container.
2 Open the valve to fill the system, and wait until water begins to seep out of the valve.
3 Switch on the electricity supply to the boiler, leaving the gas valve closed.
4 Activate a heat request via the ambient thermostat or the remote control panel, so that the 3-way valve goes into heating mode.
5 Activate a hot water request using the storage tank's thermostat.
6 Carry on with the sequence until only water comes out of the air vent valve, and the air flow has stopped. Close the air vent valve.
7 Check that the system's pressure level is correct (the ideal level is 1 to 1.5 bar).
8 Close the system filling valve.
9 Open the gas valve and ignite the boiler.

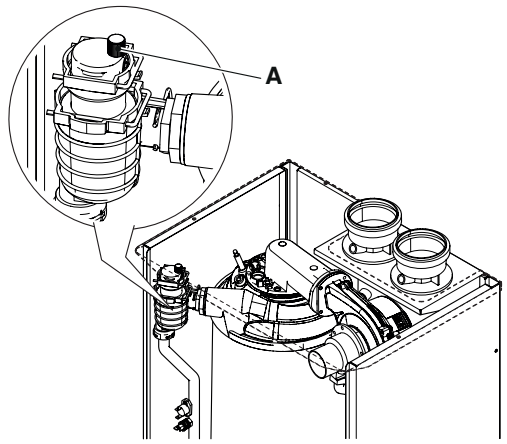

Fig. 9

3.4 Cleaning the system / characteristics of the heating circuit water

In the case of a new installation or replacement of the boiler, it is necessary to clean the heating system.
It is recommended to equip the system with a filter for collecting and separating any impurities that may be present within the system itself (sludge remover filter).
On systems with metal components, it is highly recommended to use a magnetic filter with adequate characteristics. The filter must be regularly maintained in order to avoid damaging the boiler's internal components, including the primary heat exchanger and the circulator.

To ensure the device works well, top up the additives and/or chemical treatments (e.g. anti-freeze liquids, filming agents, etc.) and check the parameters in the table are within the values indicated.

Parameters	Heating circuit water	Filling water	udm
pH value	7 ÷ 8	-	
Hardness	-	15 ÷20	° F
Appearance	-	clear	

3.5 Positioning the boiler and making the hydraulic connections

⚠ Before installing, check you have the necessary spaces for the system, considering the dimensions of the boiler, the flue gas discharge system, and the hydraulic circuit.

The boiler comes standard with a boiler support plate (F). The position and dimensions of the hydraulic connections are shown in detail. In addition, a cardboard template is included with the standard equipment to assist the installer in his work.
In order to mount the boiler directly on the wall, perform the following operations:

- fasten the boiler support plate to the wall and use a level to make sure it is perfectly horizontal
- mark the positions of the 4 holes for fastening the boiler support plate
- make sure that all measurements are exact, then drill the wall using drill tips with the diameters indicated above
- fasten the plate to the wall.

See the following diagram; if necessary, use the cardboard templates supplied along with the boiler.

Support frames for wall and floor applications are also available as an accessory.
In order to install the accessories, please refer to the instructions supplied along with them.
Complete the water connections and assemble the drain pipes for the safety valve and the 3-way valve.
After installing the boiler and connecting it to the water and gas supplies, fit the couplings cover.

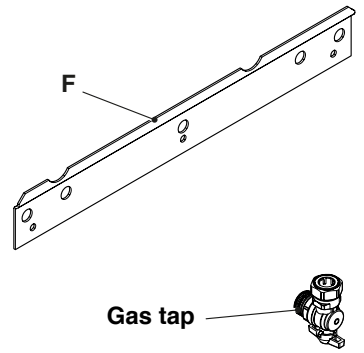

Fig. 10

Assembly diagram

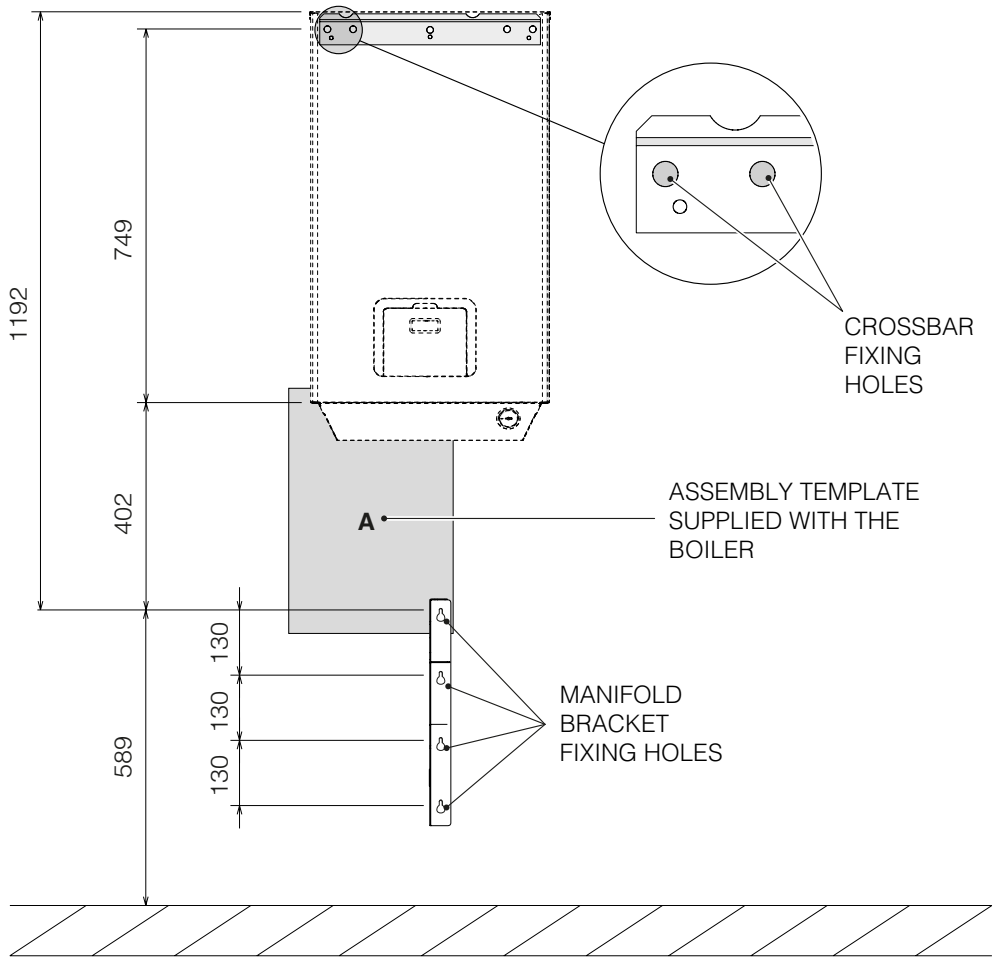

Fig. 11

Vokèra

3.6 Outdoor sensor installation

The outdoor sensor (optional) must be positioned correctly in order to ensure the climate control's proper functionality. The sensor must be installed outside the building to be heated, at approx. 2/3 the height of the NORTH or NORTH WEST façade and far from flues, doors, windows and sunny areas.

Fastening the outdoor sensor to the wall

- Unscrew the sensor protection box cover, turning it anticlockwise to access the terminal board and fastening holes
- Trace the fastening points using the box as a template
- Remove the box and drill the holes for the 5x25 expansion plugs
- Fasten the box to the wall, using the two supplied dowels
- unscrew the nut on the fair lead, and insert a bipolar cable (with a cross section of 0.5 to 1mm^2, not supplied) to connect the probe to terminals 7 and 8 (see the scheme in the chapter "Multi-row wiring diagram")
- connect the two cable wires to the terminal board without identifying the polarities
- fully tighten the cable gland nut and close the protection box cover.

⚠ The sensor must be positioned on a smooth wall section. If there are exposed bricks or irregular walls, an area with a smooth contact must be prepared.

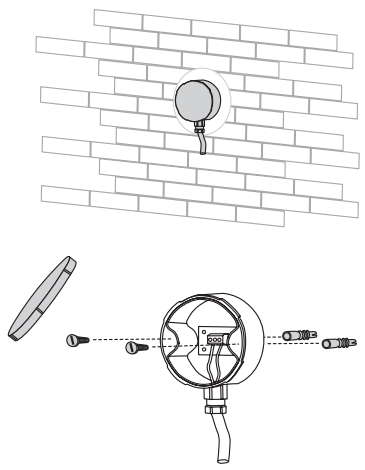

Fig. 12

⚠ The maximum length of the connection between the outdoor sensor and the control panel is 50 m. In the case of connections with a cable length that exceeds 50 m, check compliance of the value read on the card with a real measurement and adjust parameter 39 to make any necessary correction.

⚠ The connection cable between the outdoor sensor and the control panel must not have couplings. If these are necessary, they must be watertight and suitably protected.

⚠ Any channelisation of the connection cable must be separated by live cables (230Vac).

Correspondence table for all sensors

Measured temperatures (°C) - Resistive values of the sensors (Ω).

T (°C)	R (°Ω)	T (°C)	R (°Ω)	T (°C)	R (°Ω)	T (°C)	R (°Ω)	T (°C)	R (°Ω)	T (°C)	R (°Ω)	T (°C)	R (°Ω)
- 20	67739	- 1	28481	18	13062	37	6470	56	3426	75	1925	94	1137
- 19	64571	0	27279	19	12565	38	6247	57	3319	76	1870	95	1108
- 18	61568	1	26135	20	12090	39	6033	58	3216	77	1817	96	1079
- 17	58719	2	25044	21	11634	40	5828	59	3116	78	1766	97	1051
- 16	56016	3	24004	22	11199	41	5630	60	3021	79	1717	98	1024
- 15	53452	4	23014	23	10781	42	5440	61	2928	80	1669	99	998
- 14	51018	5	22069	24	10382	43	5258	62	2839	81	1622	100	973
- 13	48707	6	21168	25	9999	44	5082	63	2753	82	1577	101	948
- 12	46513	7	20309	26	9633	45	4913	64	2669	83	1534	102	925
- 11	44429	8	19489	27	9281	46	4751	65	2589	84	1491	103	901
- 10	42449	9	18706	28	8945	47	4595	66	2512	85	1451	104	879
- 9	40568	10	17959	29	8622	48	4444	67	2437	86	1411	105	857
- 8	38780	11	17245	30	8313	49	4300	68	2365	87	1373	106	836
- 7	37079	12	16563	31	8016	50	4161	69	2296	88	1336	107	815
- 6	35463	13	15912	32	7731	51	4026	70	2229	89	1300	108	796
- 5	33925	14	15289	33	7458	52	3897	71	2164	90	1266	109	776
- 4	32461	15	14694	34	7196	53	3773	72	2101	91	1232	110	757
- 3	31069	16	14126	35	6944	54	3653	73	2040	92	1199		
- 2	29743	17	13582	36	6702	55	3538	74	1982	93	1168		

3.7 Electrical connections

Before connecting the boiler to its electrical power supply, it is recommended:

- install a thermal magnetic circuit breaker In=10 A Idn= 0.03 mA along the boiler's electrical power line.

⚠ The electrical power cables and control cables (ambient thermostat, external temperature probes, etc.) must be rigorously separated from one another, and installed inside independent sections of corrugated PVC piping, all the way up to the electrical panel (see the installation template).

⚠ The connection to the electrical power supply must be performed using type 1 sheathed cables (3 x 1.5) N1VVK or equivalent, while simple N07VK type or equivalent conductors can be used for the thermoregulation and low voltage circuits.

⚠ If the electrical power provided by the electrical company is of a "**PHASE-PHASE**" connection type, preventively contact the nearest Technical Assistance Centre.

⚠ Never shut the boiler off during its normal functionality (with the burner on) by shutting off the electrical power supply using the on-off button or an external switch.
This could cause the primary heat exchanger to overheat

⚠ During heating phases, shutdowns must be performed using an ambient thermostat, or else the appropriate summer/winter button on the control panel. The on-off button can only be used with the boiler in standby mode (the screen displays a 0 followed by a temperature value), or else in emergency mode.

- Arrange the electrical conductors and their relative containment pipes according to the indications shown in the electrical diagram (based on the boiler model to be installed), which can be found in the technical data sheets contained in this manual. The connection to the mains supply must be made via a separation device with an omnipolar opening of at least 3.5mm (EN 60335-1, category III).

Before connecting any external electrical components to the boiler (regulators, electric valves, climate control probes, etc.), check to make sure that their electrical characteristics are compatible with the available inputs and outputs (voltage, absorption, acceleration current).

3.7.1 Grounding system

Always check the proper functionality of the "grounding conductor" for the electrical system to which the boiler will be connected. In fact, if it is not functioning properly, the boiler could go into safety lockout mode, and premature corrosion could take place on the storage tank.

3.7.2 Connection to the electrical power supply

Connect the boiler to a single-phase 230 V-50 Hz electrical power line using the appropriate power cable (see chapter Multi-row wiring diagram).
The electrical panel contains the terminal board for the auxiliary devices (ambient thermostat, external probe) that correspond to each connection.
Particular caution must be taken to avoid inverting the Phase and Neutral wires.
Also make sure that the power cables are separated from the control cables using sections of corrugated PVC piping.
It should also be noted that the grounding connection must be performed in accordance with the provisions of Italian Law 46/90.

⚠ **Vokera** the manufacturer shall bear no responsibility for any personal injuries or property damage caused by the electrical system's incorrect or lack of connection to the grounding system, or by the failure to respect the current applicable CEI standards.

3.8 Gas connections

The gas connection must be made respecting the installation regulations in force, and sized to ensure the correct gas delivery to the burner.
Before making the connection, check that:

- the gas type is suitable for the appliance
- the piping is thoroughly clean
- the gas meter's flow rate is capable of ensuring the simultaneous use of all the appliances connected to it. The boiler's connection to the gas supply line must be carried out in accordance with the current regulations.
- the intake pressure with the boiler off has the following reference values:
  - powered by methane gas: optimal pressure 20 mbar
  - powered by L.P.G.: optimal pressure 35 mbar

While it is normal for the intake pressure to decrease while the boiler is in function, it is recommended to verify that no excessive pressure fluctuations take place. In order to limit the extent of these types of variations, the diameter of the gas supply line to be utilized must be evaluated based on the length and the pressure drops of the line itself, from the meter to the boiler.
If fluctuations in the gas distribution pressure are encountered, it is recommended to install an appropriate pressure stabilizer upstream of the boiler's gas intake. For L.P.G. gas supplies, all the necessary precautions must be taken in order to prevent the gas from freezing in the case of extremely low external temperatures.
If the boiler needs to be adapted for use with another gas fuel, contact your local Technical Assistance Centre to have the necessary modifications made. These operations may not be performed by the installer under any circumstances.
It is advisable to install a filter of suitable dimensions on the gas line if the distribution network contains solid particles.
Once the appliance has been installed, check the connections are sealed according to current installation regulations.

3.9 Hydraulic diagrams

SINGLE BOILER INSTALLATION

Water circuit schemes legend		
1	Heat generator	
2	Fuel shut-off valve probe pit	**kit D**
3	Lockout thermostat with manual reset, INAIL certified [100(0-6°C)]	**kit E**
4	Sump for test thermometer	**kit E**
5	Thermometer, INAIL certified (scale from 0 to 120°C)	**kit E**
6	Safety valve, INAIL certified (3.5 bar)	**kit E**
7	Lockout pressure switch with manual reset, INAIL certified	**kit E**
8	3-way valve with pressure gauge holder and test flange for sample pressure gauge	**kit E**
9	Bypass damper coil	**kit E**
10	Pressure gauge, INAIL certified (scale from 0 to 6 bar)	**kit E**
11	Fuel shut-off valve, INAIL certified (calibrated to 97°C) - capillary probe length 5m	**kit D**
12	Expansion tank fitting	**kit C**
13	Return line shut-off valve	**kit C**
14	3-way delivery line shut-off valve	**kit C**
15	3-way storage tank connection valve (*)	**kit B**
16	Storage tank delivery line "T" connection	**kit B**
17	Hydraulic separator	**kit A**
18	Gas cock	
19	Check valve	**kit C**

(*) Not necessary for the R.S.I. version

⚠ For the electrical connection of the INAIL certified pressure switch and safety thermostat, follow the indications provided in the following scheme.

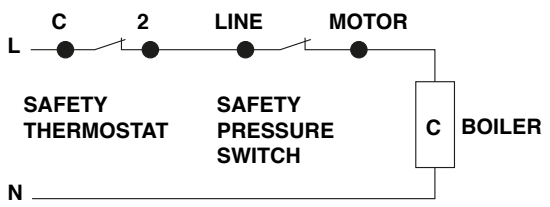

Fig. 13

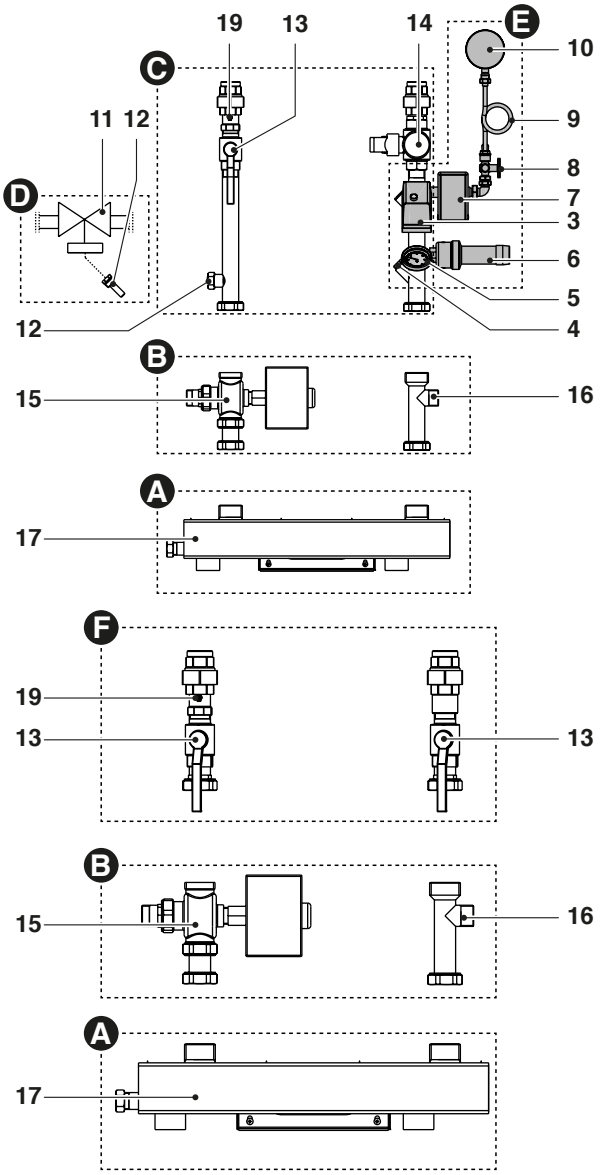

Fig. 14

- **A** water separator kit
- **B** 3-way valve kit for storage tank
- **C** INAIL connection kit
- **D** fuel shut-off valve kit
- **E** INAIL kit
- **F** system shut-off valves kit

VERVE i 50

INAIL connection Kit + INAIL Kit + water separator Kit

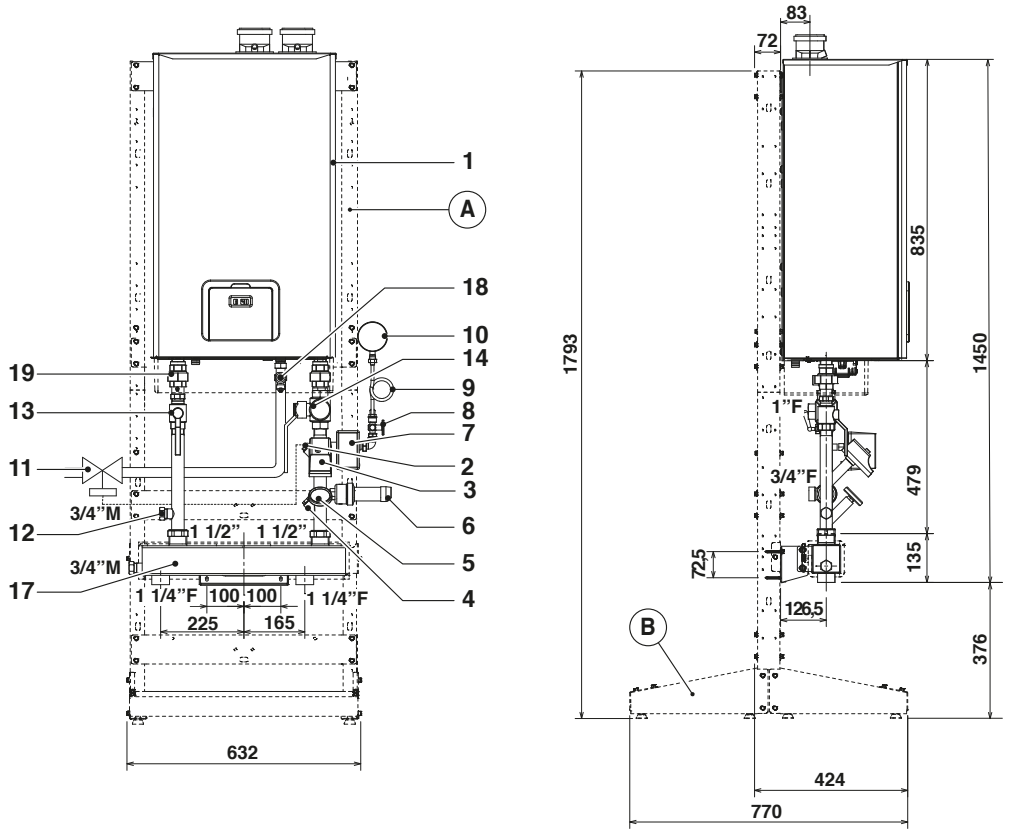

A Frame kit

B rear bracket kit (floor application)

Fig. 15

VERVE i 50

INAIL connection Kit + INAIL Kit + water separator Kit + storage tank 3-way valve kit

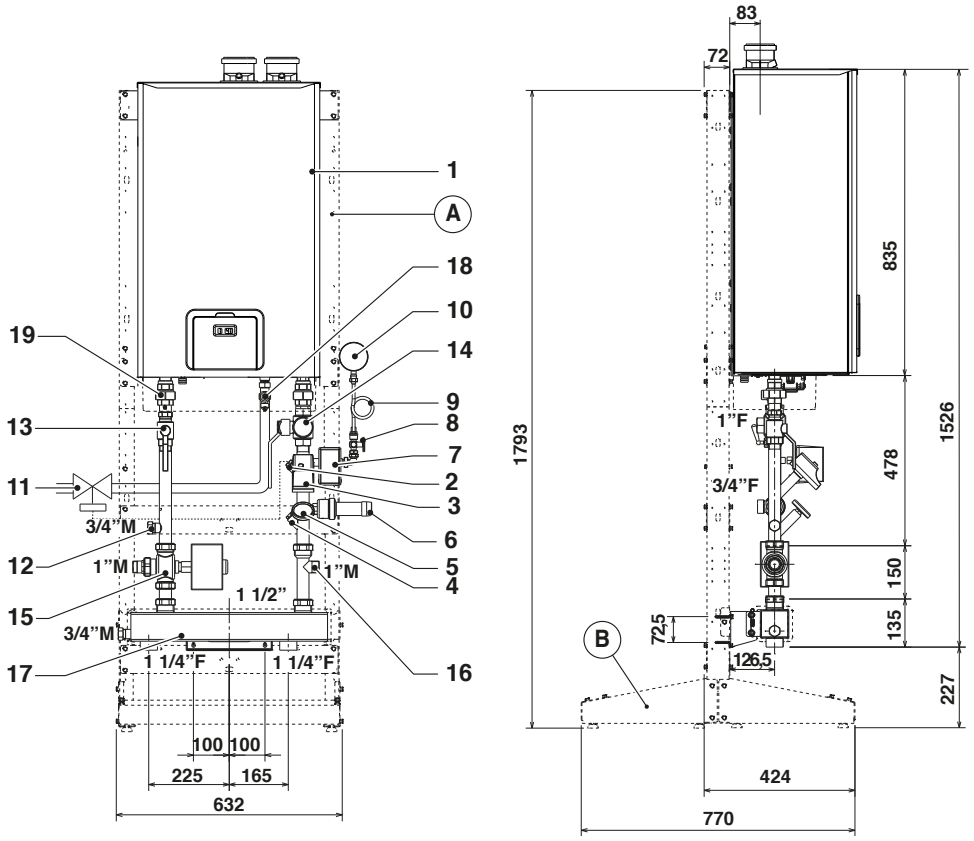

A Frame kit

B rear bracket kit (floor application)

Fig. 16

Vokèra

Water scheme for heating-only system with optional HT or LT circuit

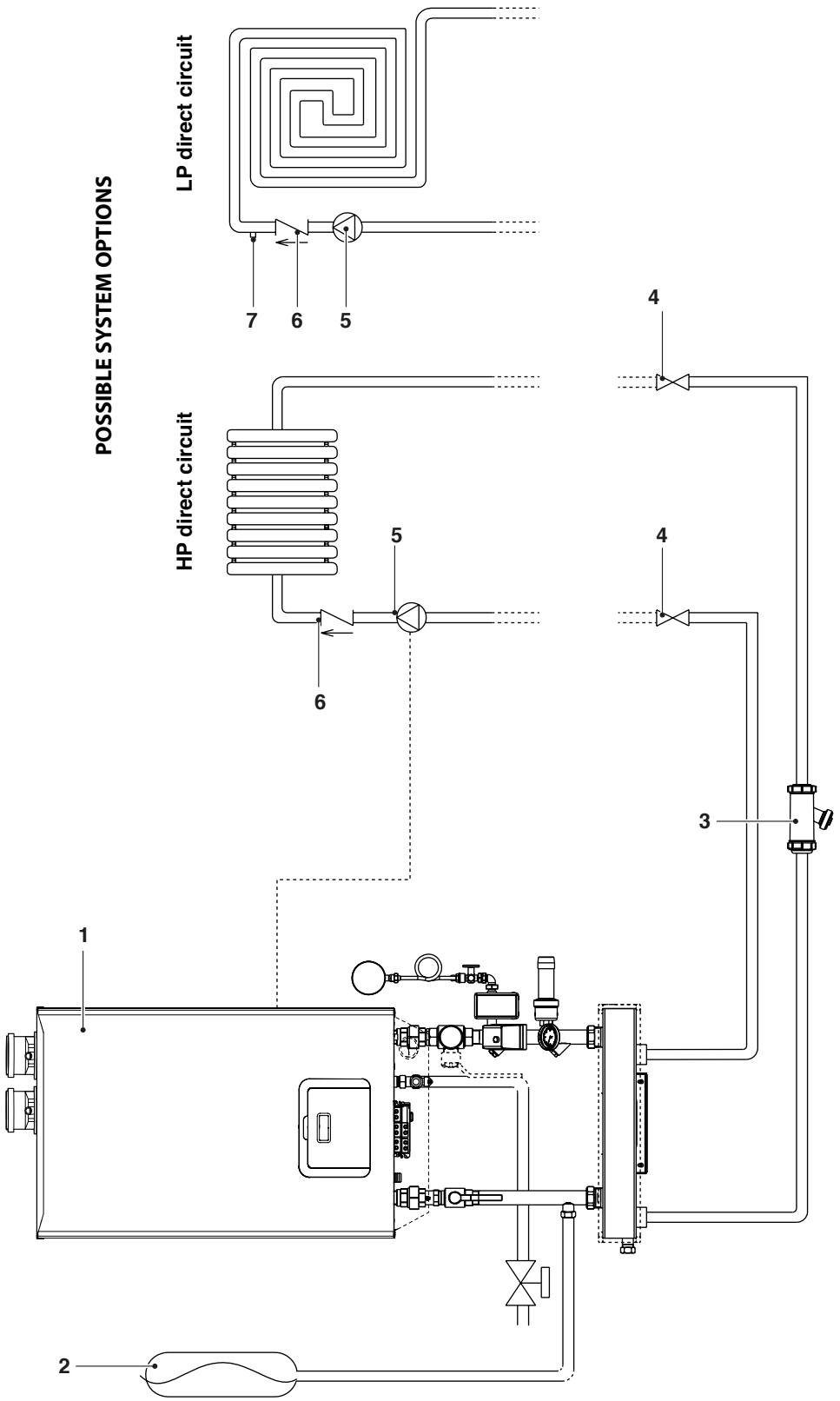

Fig. 17

1 Heat generator
2 Expansion vessel (indoor also available as an option)
3 System filter
4 System shut-off valve
5 Circulator (230Vac / 50Hz / P<120W)
6 Non-return valve
7 Safety thermostat with contact compatible at low voltage and low current

Water scheme for HT circuit system and domestic water storage tank (3-way command)

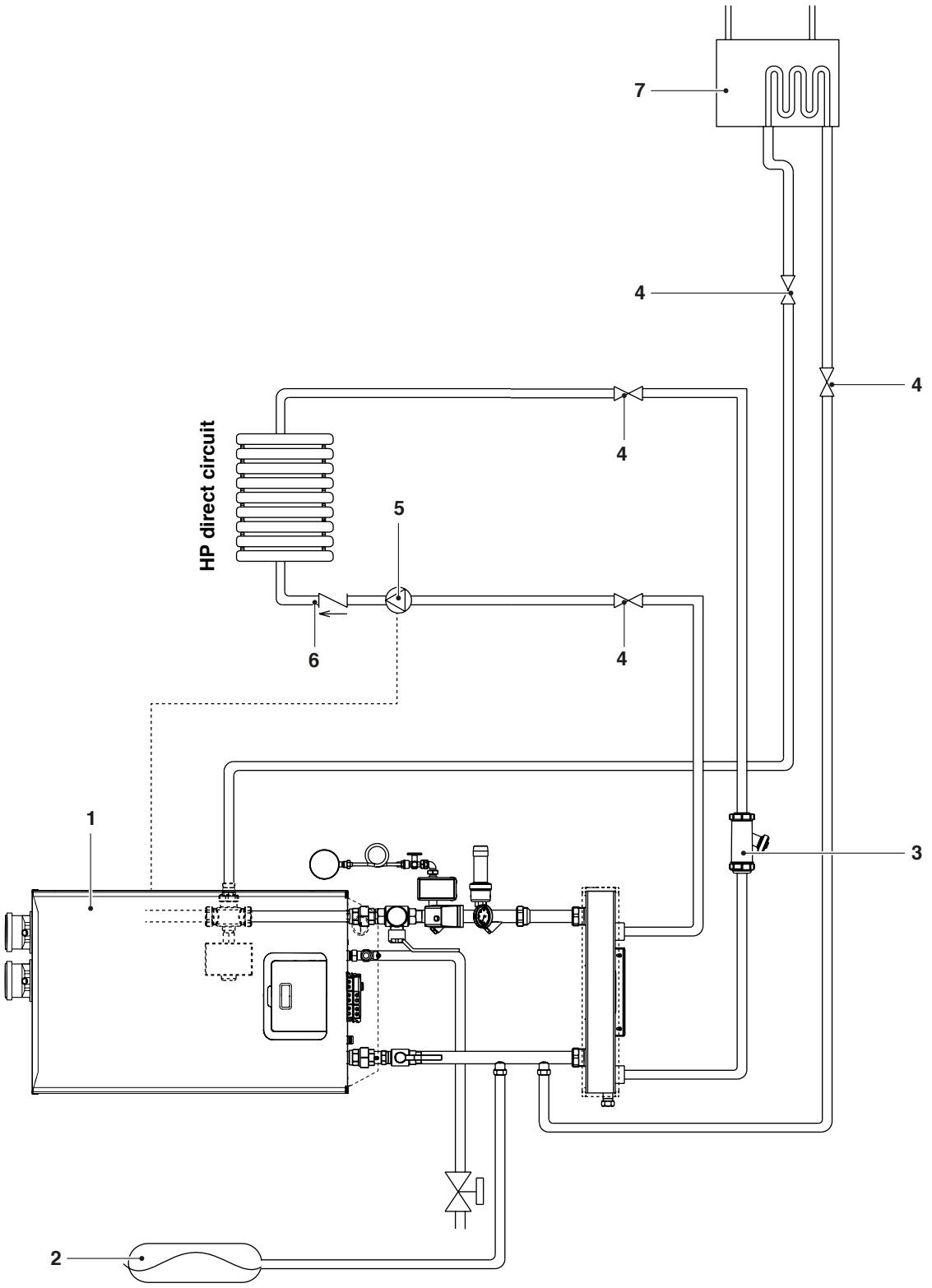

Fig. 18

1 Heat generator
2 Expansion vessel (indoor also available as an option)
3 System filter
4 System shut-off valve
5 Circulator (230Vac / 50Hz / P<120W)
6 Non-return valve
7 Storage cylinder

Vokèra

Water scheme for HT + LT circuit system and domestic water storage tank (3-way command)

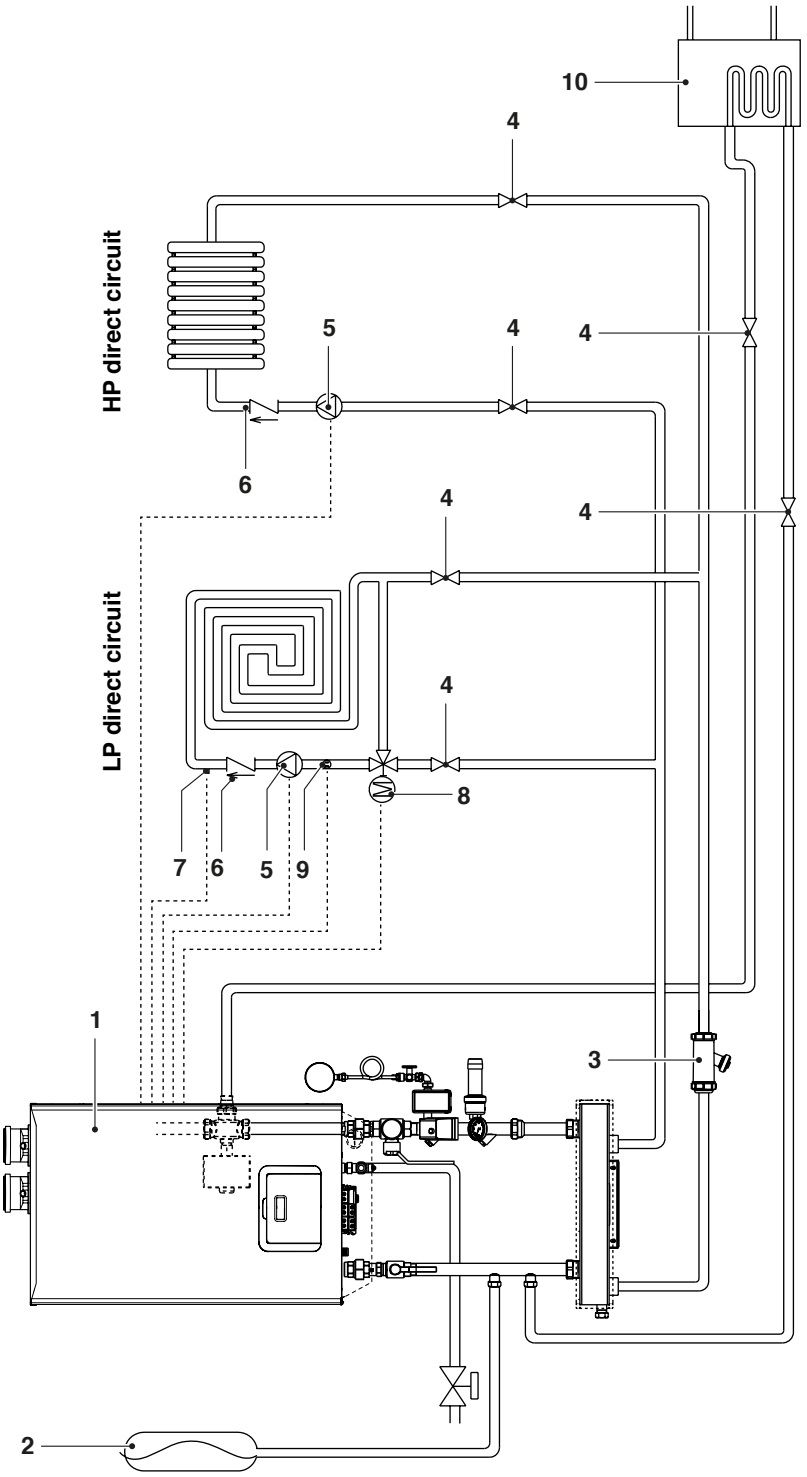

Fig. 19

1 Heat generator
2 Expansion vessel (indoor also available as an option)
3 System filter
4 System shut-off valve
5 Circulator (230Vac / 50Hz / P<120W)
6 Non-return valve
7 Safety thermostat with contact even compatible with low voltage/low current
8 Mixer valve (24VAC/ 50Hz / P<50W / 120sec)
9 BT circuit probe (NTC 10KΩ@25°C β 3545)
10 Storage cylinder

3.10 Evacuation of combustion products and air suction

For flue gas discharge, refer to Standards UNI-CIG 7129-7131 and UNI 11071. Always comply with local standards of the Fire Department, the Gas Company and with possible municipal dispositions.
The discharge of flue gas is guaranteed by the centrifugal fan fitted in the boiler.
The boiler is supplied without the flue gas outlet/air suction kit, since it is possible to use the accessories for appliance with a forced draught sealed chamber that better adapts to the installation characteristics.
For flue gas discharge and the restoration of boiler combustion air, it is essential to use only our original, specific pipes for condensation boilers, and to ensure that the connection is made correctly (as indicated in the instructions supplied with the flue gas accessories).
The boiler is a C-type appliance (with airtight chamber), and must therefore have a safe connection to the flue gas discharge pipe and to the combustion air suction pipe; these both carry their contents outside, and are essential for the operation of the appliance.
Both concentric and twin terminals are available.

MAIN OUTLET CONFIGURATIONS

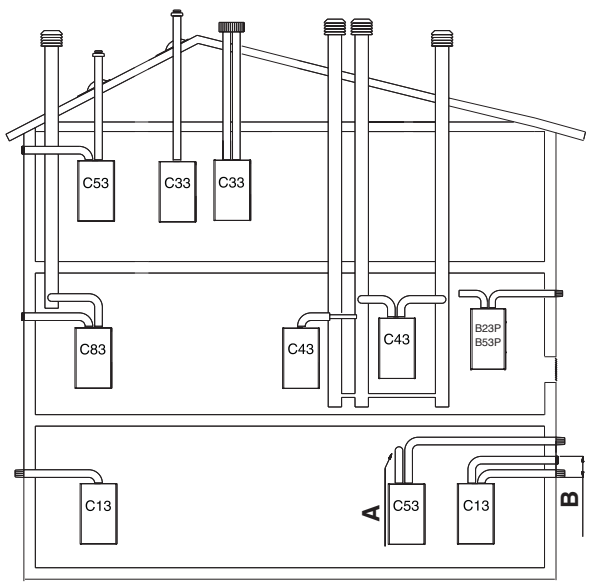

Fig. 20

A rear outlet
B max 50 cm

As envisaged by Standard UNI 11071, the boiler is designed to take in and dispose of flue gas condensate and/or meteoric water condensate deriving from the flue gas discharge system. It does this via its own drain-tap, if an external drain-tap is not fitted during the design or installation phase.

if a condensate relaunch pump is installed, check the technical data (provided by the manufacturer) regarding output, to ensure it operates correctly.

Do not convey the flue gases from multiple boilers into the same discharge pipe; each must have its own independent pipe. If the discharge pipe needs to be extended beyond 4 metres, it is recommended to install a siphon at the base of the vertical tract, as shown in the figure on chapter Preparation for the condensate drain.

3.10.1 "Forced open" installation (type B23P-B53P)

Flue gas discharge pipe ø 80mm

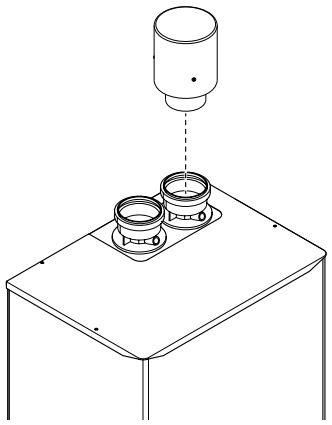

Fig. 21

To arrange this configuration, you must use the specific connection point supplied as an accessory.

In this case, the combustion air is picked up from the boiler installation room (which must be a suitable technical room with proper ventilation).

The non insulated flue gas outlet pipes are potential sources of danger.

Make sure the flue gas discharge pipe is tilted 3° towards the boiler.

Follow the instructions provided in the flue pipe kit to install the flues.

Description	Maximum length of the flue gas discharge pipe ø 80mm	Pressure drop	
		45° bend	90° bend
VERVE i 50	50 m	1 m	3 m

3.10.2 "Airtight" installation (type C)

The boiler must be connected to concentric or twin flue gas discharge pipes and air suction pipes, both leading outdoors. The boiler must not be operated without them.

Concentric pipes (ø 60-100mm)

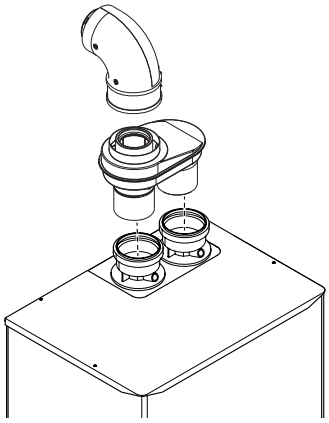

Fig. 22

To connect the concentric pipes, use the specific adaptor supplied as an accessory.
The frame spacer kit must be utilized for the wall-mounted rear concentric discharge (see the Catalogue).
The concentric pipes can face in the direction most suitable for installation requirements, but special attention should be paid to the external temperature and the length of the pipe.

⚠ Make sure the flue gas discharge pipe is tilted 3° towards the boiler.

⚠ Uninsulated flue pipes are potentially dangerous and can cause burns.

⚠ Never obstruct or partly choke the comburent air intake pipe.

For installation, follow the instructions supplied with the kit.

Description	Maximum length of the concentric pipe Ø 60-100 mm	Pressure drop	
		45° bend	90° bend
VERVE i 50	20 m	1 m	3 m

Concentric pipes (ø 80-125mm)

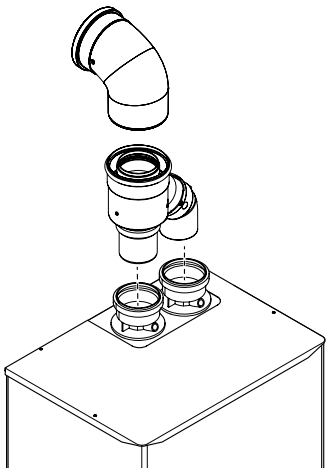

Fig. 23

To connect the concentric pipes, use the specific adaptor supplied as an accessory.
The frame spacer kit must be utilized for the wall-mounted rear concentric discharge (see the Catalogue).
The concentric pipes can face in the direction most suitable for installation requirements, but special attention should be paid to the external temperature and the length of the pipe.

⚠ Make sure the flue gas discharge pipe is tilted 3° towards the boiler.

⚠ Uninsulated flue pipes are potentially dangerous and can cause burns.

For installation, follow the instructions supplied with the kit.

Description	Maximum length of the concentric pipe Ø 80-125 mm	Pressure drop	
		45° bend	90° bend
VERVE i 50	30 m	1 m	3 m

Twin pipes (ø 80mm)

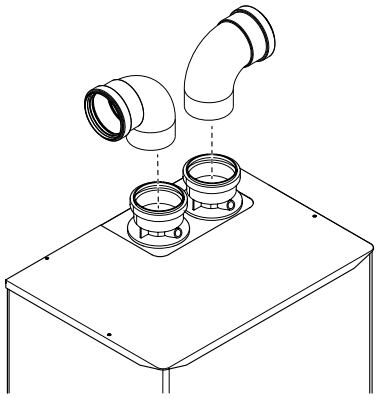

Fig. 24

The concentric pipes can be fitted in most suitable direction in relation to installation requirements.

⚠ Make sure the flue gas discharge pipe is tilted 3° towards the boiler.

⚠ The use of longer pipes reduces the boiler output.

For installation, follow the instructions supplied with the specific accessory kit for condensing boilers.

Description	Maximum length of the twin pipe Ø 80 mm	Pressure drop	
		45° bend	90° bend
VERVE i 50	25+25 m	1 m	3 m

3.10.3 Use of old flue pipes

The **VERVE i** boiler's discharge pipe cannot be connected directly to any pre-existing flue pipes utilized for other purposes (kitchen hoods, boilers, etc.). It is however possible to use an old flue pipe or duct, that is no longer suitable for its original purpose, as a technical casing, and to insert the boiler's discharge and/or suction pipes inside it.

3.10.4 Preparation for the condensate drain

The evacuation of the condensate produced by the **VERVE i** boiler during its normal operation must be carried out at atmospheric pressure, by dripping into a siphoned receptacle connected to the local drain or sewer system, according to the following procedure:

- Create a drip collection receptacle under the condensate drain (see the position in Fig. 1);
- Connect the drip collection receptacle to the local drain or sewer system using a siphon.

The drip collection receptacle can be created by installing a dedicated cup, or even a simple poly propylene curve, suitable for receiving the condensate that comes out of the boiler and any liquid leaks from the safety valve.
The maximum distance between the boiler's condensate drain and the collection cup (or cupped piping) must not be less than 10 mm.

The connection to the local drain or sewer system must be created using a siphon in order to prevent unpleasant odours from being released.
We advise using plastic (PP) piping for building the condensate drainage.

Never use copper pipes under any circumstances, as the condensate itself will cause them to rapidly deteriorate.

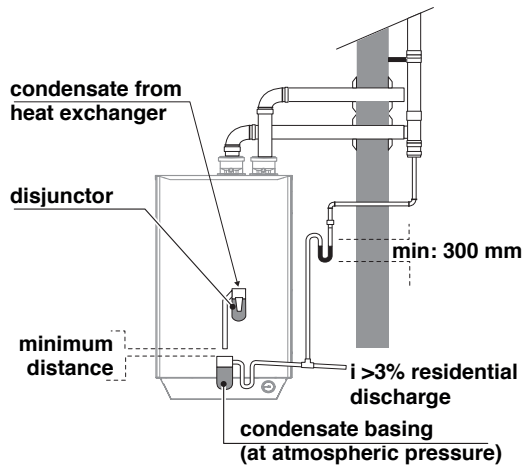

Fig. 25

If the vertical or horizontal tract of the discharge pipe needs to be extended for a length beyond 4 metres, a siphon for draining the condensate must be installed at the base of the pipe.
The siphon's useful height must be equal to at least 300 mm (see the image below)
The siphon's drain must subsequently be connected to the local drain or sewer system.

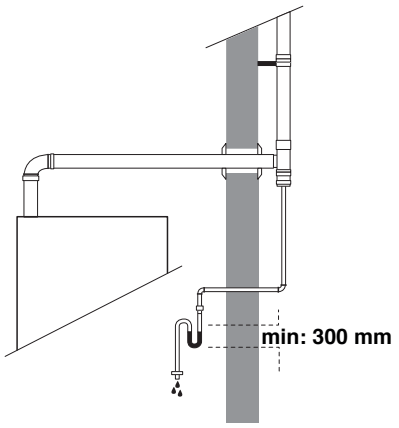

Fig. 26

3.10.5 Filling the heating system

Once the hydraulic connections have been carried out, fill the heating system.
This operation must be carried out with a cold system, following these instructions:

- open the cap on the boiler's air vent valve by two or three turns (A);

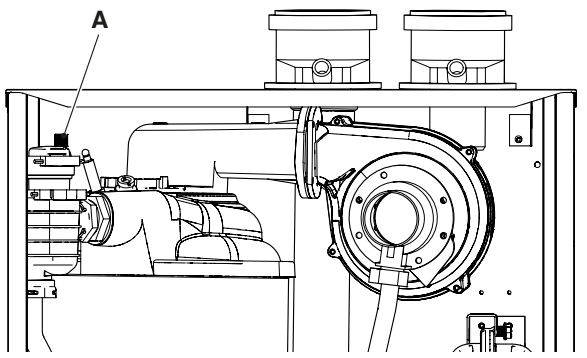

Fig. 27

- open the system's air vent valves
- open the boiler's external filling valve and wait until the pressure indicated on the hydrometer reaches a value between 1 bar and 1.5 bar. The filling procedure must be carried out slowly, in order to free the air bubbles in the water and allow them to be released via the boiler and heating system vents. For instructions on how to eliminate the air, refer to the section " Eliminating the air from the heating circuit and boiler".
- Close the filling tap
- Close the radiators' vent valves once only water is coming out of them.

⚠ Although the standard boiler does not come with an expansion tank, one must nevertheless be installed in order to ensure the appliance's proper functionality. A dedicated kit for installing the expansion tank on board the boiler is available as an accessory. The dimensions of the expansion tank must be suitable for the heating system characteristics, and the tank capacity must meet the requisites of the current regulations (collection R).

If the pressure value approaches 3 bar, there is a risk that the safety valve will be triggered. In this case, it is necessary to request the intervention of professionally qualified personnel.

3.10.6 Emptying the heating system

Before emptying the system, always remember to shut-off the electrical power supply by setting the system's main switch to its "off" position.

- Close the heating system's valves
- Manually loosen the system's drain valve (B) and connect the pipe (supplied along with the boiler) to it in order to drain the water into an external container.

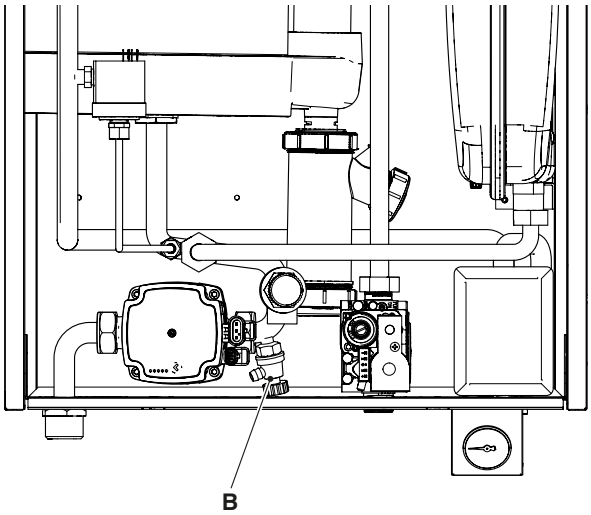

Fig. 28

4 IGNITION AND OPERATION

4.1 Preliminary operations

Before using the boiler, make sure that:
- The shutoff valves on the gas line are open.
- The boiler's external main switch is on.
- The water circuit has been filled. If this is not the case, fill the system according to the instructions provided in the section "Filling the heating system".

Using the pressure indicator (hydrometer Fig. 1) on the instrument panel, check to make sure that the heating system's pressure is within the range of 0.8 to 1.2 bar (below 0.5 bar the appliance will remain inactive). If a lower pressure value is encountered, with the BOILER COLD, open the filling valve until a value of 1 bar is obtained.
Close the valve once the operation has been completed.

4.2 Turning the boiler on and off

The boiler can be turned on by holding down the "On / Off" button for five seconds.

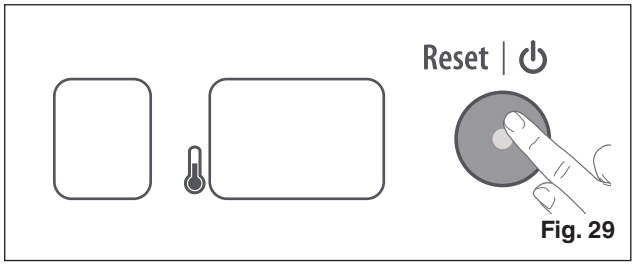

Fig. 29

If you want to shut off the boiler for a brief period of time, press the "On / Off" button.
If you want to shut off the boiler for an extended period of time, in addition to pressing the aforementioned button, it is also necessary to shut off the boiler's external main switch and close the boiler's gas shut-off valve.

4.3 Boiler operating modes

If the boiler has been configured to produce domestic hot water using an external storage tank, two different operating modes can be selected:
1 SUMMER mode
In this mode, the boiler only produces domestic hot water.
2 WINTER mode
In this mode, the boiler heats the water for the heating system, as well as for domestic hot water purposes.

In order to select one of the two operating modes, it is necessary to press the boiler's mode switching button: "SUMMER / WINTER".

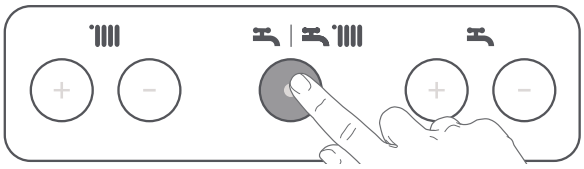

Fig. 30

If the display shows the message "**3_on**", this indicates that WINTER mode is enabled.
If the display shows the message "**3_of**", this indicates that SUMMER mode is enabled.

4.3.1 Domestic hot water temperature setting

The storage tank's connection to the boiler is extremely easy. There are two possibilities:

1 Storage tank with thermostat
2 Storage cylinder with probe

1 Storage tank with thermostat
Connection to a storage tank with thermostatic adjustment:
- complete the water circuit shown in Fig. 31
- connect the electrical connections for the diverter valve (V) to contacts 16, 17 and 18 on the boiler's terminal board (M)
- connect the contacts for the storage tank's adjustment thermostat (T) to contacts 7 and 8 on the boiler's terminal board (M)

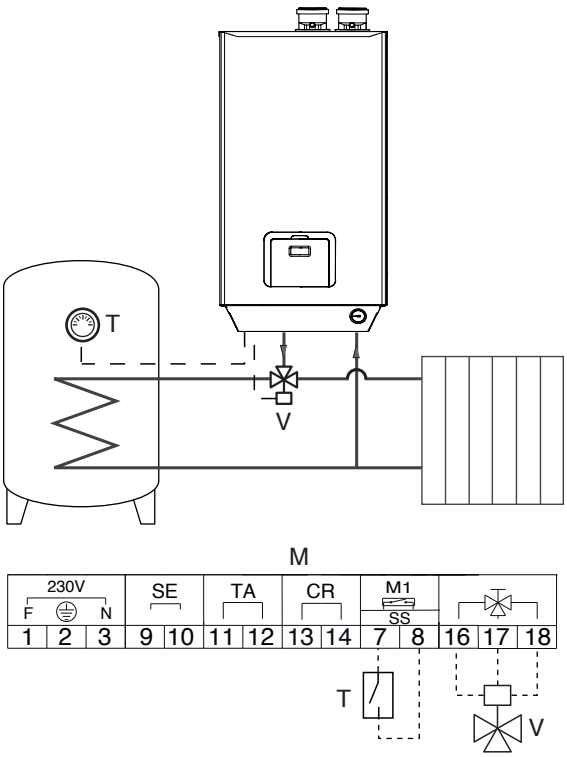

Fig. 31

16 Domestic hot water phase
17 Heating phase
18 Neutral

Vokèra

When the storage temperature drops below the set value on the storage tank's thermostat, the boiler switches the diverter valve towards the hot water circuit, activates the circulator, and ignites the burner to meet the storage tank's requirements.
The domestic hot water function has priority in the event of a simultaneous request from the heating circuit.

2 Storage cylinder with probe
Connection to a storage cylinder with probe:
- complete the water circuit shown in Fig. 32
- connect the electrical connections for the diverter valve (V) to contacts 16, 17 and 18 on the boiler's terminal board (M)
- connect the storage tank's probe (S), which is supplied as an accessory, to contacts 7 and 8 on the boiler's terminal board (M)
- set the value of parameter 23 on the board to "2" (the factory setting is "3")

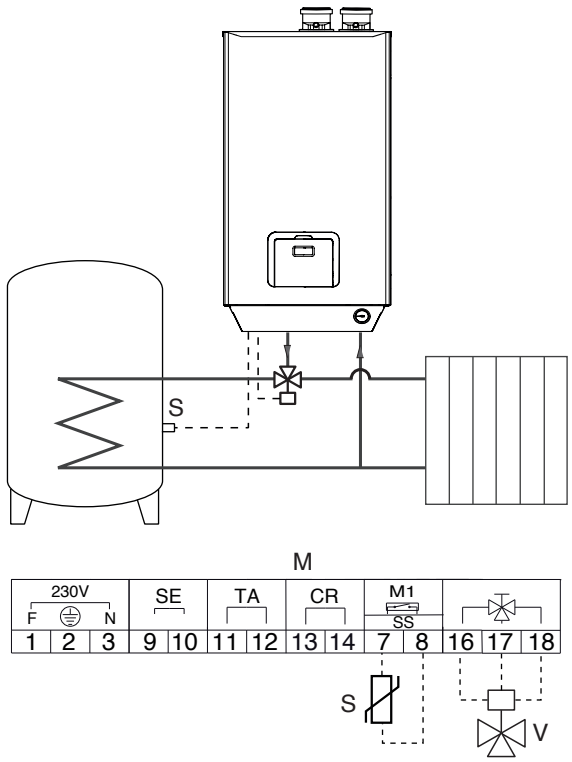

Fig. 32

16 Domestic hot water phase
17 Heating phase
18 Neutral

The boiler will automatically recognize that an external storage tank has been connected. The functionality of the SUMMER/WINTER buttons and the domestic hot water temperature adjustment will be activated on the control panel. The domestic hot water circuit can therefore be managed from the control panel using the same methods previously described.

Connect the diverter valve to the terminal board, keeping in mind that contact 16 is powered on when the boiler is operating in "Domestic Hot Water" mode, contact 17 is powered on when the boiler is in "Heating" mode, and contact 18 is the common neutral wire.

The boiler heats water for domestic hot water purposes whenever required, in both SUMMER and WINTER mode.
The temperature of the hot water can be adjusted by the user by pressing the "+" or "-" buttons.

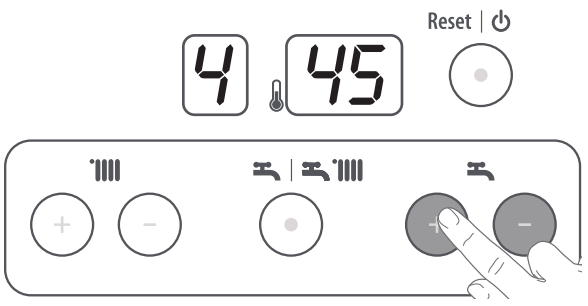

Fig. 33

The following value will appear on the left-hand display: "**4**", while the right hand display will indicate the temperature of the water being delivered to the domestic utilities in Celsius. The temperature value will increase or decrease by one degree each time the buttons are pressed.
The temperature can be adjusted to any value between 20 and 60 degrees Celsius.

4.4 Heating water temperature adjustment

4.4.1 Adjustment without an external climate control probe (optional)

The temperature of the water delivered to the heating system's terminals can be adjusted by the user by pressing the "+" or "-" buttons.

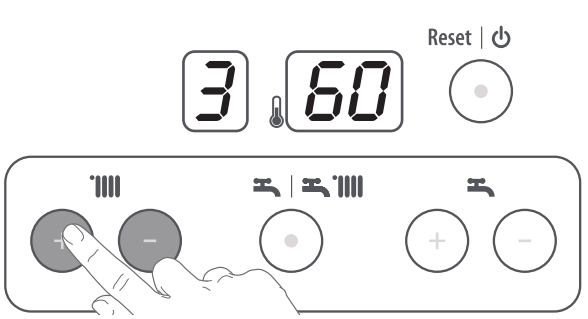

Fig. 34

The number "**3**" will appear on the left-hand display, while the right hand display will show the set temperature value in Celsius.
The temperature can be adjusted to any value between 10 and 80 degrees Celsius.

If the unit is equipped with a board for managing a low temperature zone, the temperature of the zone itself is established based on the parameters entered by the Technical Assistance Centre.

4.4.2 Adjustment with an external climate control probe

The boiler is predisposed for climate control functionality thanks to the use of an external probe, which, once installed, is automatically recognized by the boiler's electronic components.

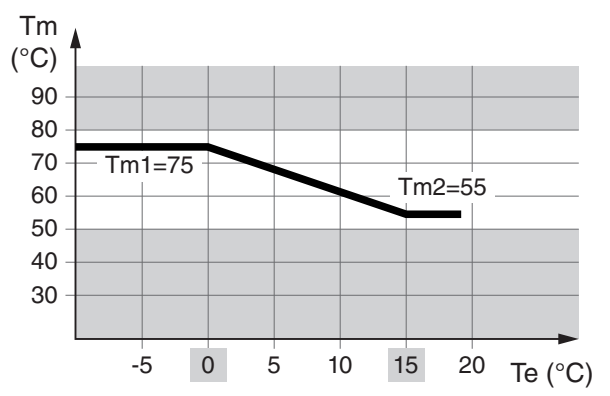

Fig. 35

In this case, the operations described in the previous paragraph are no longer necessary, since the delivery temperature of the heating water (Tm) is automatically established by the boiler's electronic components based on the external temperature (Te), and based on the parameters that the Technical Assistance Centre, who performs the first start-up, is required to enter.

Fig. 35 contains an example of the curve that determines the relationship between the delivery temperature to the system (TM) and the external temperature (TE).

The curve can nevertheless be modified by the user in order to obtain a climatic adjustment that's perfectly suited to the thermal insulation characteristics of the dwelling itself, while at the same time always ensuring maximum comfort in terms of heat. In order to adjust the curve, the following procedure must be performed:

- Press the "+" or "-" button for the heating function. The left-hand display will show the number "**3**", while the right-hand display will show the heating water's current temperature in Celsius (which depends on the building's external temperature at that same moment). The lower the external temperature, the higher the delivery temperature (Tm) will be.
- Press the "+" or "-" buttons for the heating function one or more times to increase or decrease the temperature.

If the unit is equipped with a board for managing a low temperature zone, it is possible to enable adjustment using the external climate control probe for the low temperature zone as well, with parameters different from those used for the high temperature zone, which must likewise be entered by the Technical Assistance Centre the first time the boiler is activated.

4.5 Monitoring the boiler

The two displays on the boiler's control panel **VERVE i** provide the user with the following information:

- The boiler's operating status,
- The temperatures set by the user (set points)
- The current temperature of the hot water being delivered to the heating system
- The current temperature of the hot water being delivered to the domestic hot water circuit
- Error messages

4.5.1 Boiler operating status

The single-digit left-hand display indicates the boiler's current operating status, and can assume the following values:

0 The boiler is on, but the burner is off since there is currently no hot water being requested for the heating system or the domestic hot water circuit. The dot on the right is flashing.

1 The boiler is on, the burner is off, and the fan is in function in order to extract any residual flue gases present in the combustion chamber. The dot on the right is flashing.

2 The boiler is on, and the burner is in its ignition phase (electrode discharge). The dot on the right is flashing.

3 The boiler is on, and the burner is on following a hot water request from the heating circuit. The dot on the right remains steadily on.

6 The boiler is on, and the burner is on following a hot water request from the domestic hot water circuit. The dot on the right remains steadily on.

Vokèra

4.5.2 Temperatures set by the user

The user can set the hot water delivery temperatures for both the heating and domestic hot water circuits.
In order to view the set heating temperature value, simply press either the "+" or "-" button for the heating function one time only.
The value set by the user, expressed in Celsius, will be shown on the two-digit right-hand display.

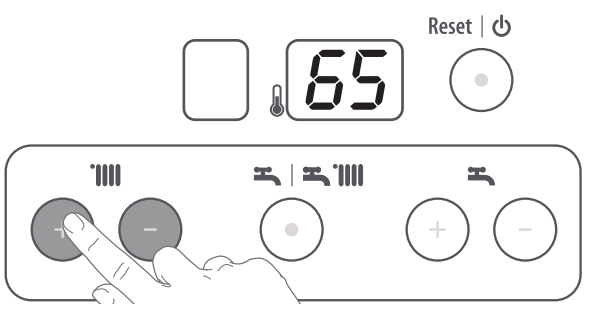

Fig. 36

In order to view the set domestic hot water temperature value, simply press either the "+" or "-" button for the domestic hot water function one time only.
The value set by the user, expressed in Celsius, will be shown on the two-digit right-hand display.

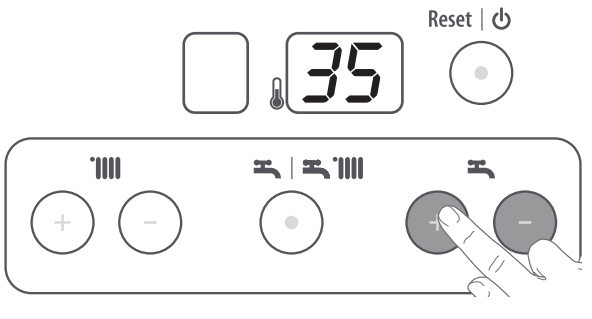

Fig. 37

4.5.3 Monitor function

The two digits on the right-hand side of the display normally show the current temperature value of the water in the heating circuit, or else that of the domestic hot water circuit, if the boiler is currently satisfying a domestic hot water request. However, all the temperatures detected by the board using the "monitor" function can also be displayed.
In order to activate this function, hold down the “SUMMER/WINTER” button (Fig. 30) until the first digit is displayed as a flashing “0”.
At this point, release the button and press it again immediately to confirm that you want to access the monitor function.
At this point, the digit on the left will show the number for the type of temperature being read, and the two digits on the right will display the value of the temperature in question.
The user can scroll through the various temperatures using the "+" and "-" buttons for the heating function.

The following table shows the various temperatures that can be displayed:

Temperature	DIG1	DIG1	DIG3
Delivery temperature	1	Value	
Return temperature	2	Value	
Domestic hot water temperature	3	Value	
Outdoor temperature	4	Value	
Flue gas temperature	5	Value	
Second circuit temperature (if present)	6	Value	
Fan speed	7	Val. x 100	
Ionisation current	8	Value*	

(*) The ideal value for the ionisation current is 70-80

To exit the monitor function, press the "SUMMER/WINTER" button again.
The appliance automatically exits the function if no button is pressed for 15 minutes.

4.5.4 Error messages

The boiler is equipped with a self-diagnostics system in order to help the maintenance personnel identify the causes of any anomalies.
When a technical anomaly occurs, the display on the left will either show the letter "A" or the letter "E", while the display on the right will show a numeric error code, which will allow the maintenance personnel to identify the possible cause.

- If the letter "A" appears on the left-hand display, this means that the "RESET" button will have to be pressed after the cause of the fault has been eliminated.
- If the letter "E" appears on the left-hand display, this means that the boiler will resume functioning normally, without having to press the "RESET" button, once the cause of the fault has been eliminated.

The list of the error codes and the descriptions of the relative anomalies are provided below:

Error type	Description
A 01	No flame.
A 02	The burner turned off three times during a request for heat. Defective ignition transformer. Defective ignition transformer power cord (see fastons on the circuit board). Flue gas pipe obstructed or partially obstructed.
A 03	The delivery temperature has exceeded the set value.
A 04	Possible safety thermostat intervention due to overheating.
A 05	Temporary internal fault.
A 07 (*)	Low temperature zone safety thermostat intervention (if present).
A 08	The ignition relay does not work well. Press the reset key. If the error is permanent replace the circuit board.
A 09	The processor RAM check is not correct. Replace the circuit board.
A 10	The contents of the E2PROM are ruined. Replace the circuit board.
A 12	The values of the E2PROM do not match those of the main software. Replace the circuit board.
A 13	There has been a type "E" error that has not been reset for more than 24 hours.
A 14	Internal software error. Replace the circuit board.
A 15	Internal software error. Replace the circuit board.
A 16	Internal software error. Press the reset key. If the error is permanent replace the circuit board.
A 17	Internal software error. Replace the circuit board.
A 18	The flame was still detected after more than 10 seconds from the closure of the gas valve. Press the reset key. If the error is permanent replace the circuit board.
A 19	The presence of a flame is detected more than 10 seconds after the closure of the gas valve.
A 20	Flame detected before the opening of the gas valve. Press the reset key. If the error is permanent replace the circuit board.
A 32	Internal software error. Press the reset key. If the error is permanent replace the circuit board.
A 33	The fan does not spin at the proper speed.
A 34	The fan does not spin. Executes 4 cycles of 3 attempts each with A 34 resettable. The last cycle triggers a permanent shutdown.
E 01	Delivery temperature probe open.
E 02	Return temperature probe open.
E 03	The delivery temperature, set on parameter 1, was exceeded by 10°C for 5 seconds.
E 08	DHW tank temperature sensor open.
E 11	Delivery temperature probe short-circuit.
E 12	Return temperature probe short-circuit.
E 13	Incorrect temperature measurement. Replace the circuit board.
E 14	Incorrect temperature measurement. Replace the circuit board.
E 15	Incorrect temperature measurement. Check the 16-pin J5 connector on the circuit board. Replace the circuit board.
E 16	Incorrect temperature measurement. Replace the circuit board.
E 18	DHW tank temperature sensor short circuited.
E 19	Not able to read the E2PROM. Replace the circuit board.
E 20	Flame detected with gas valve closed. Internal software error. Replace the circuit board.
E 21	Phase and neutral connections inverted.
E 23	Ground not connected. Poor grounding.
E 35	Flue temperature too high > 75°C. Flue sensor short circuited.
E 36	Flue thermostat contact open.
E 37	Lack of water circulation. Water pressure too low.
E 42	Communication problems. Replace the circuit board.
E 51	Reset key error. The key was pressed more than 5 times. To reset the error cut off the main power.
U 10 (*)	Low-temperature system delivery temperature probe interrupted.
U 11 (*)	Low-temperature system delivery temperature probe short-circuit.
U 21 (*)	Delivery temperature >55°C (e.g. due to a mixer valve fault).
U 99 (*)	Electrical power supply interruption on the multi-temperature kit's electronic board.

(*) Errors associated with the multi-temperature control board (where present and enabled)

If an error not present in the table is displayed, contact the Technical Assistance Centre.

4.6 Adjustments

The boiler has already been adjusted by the manufacturer. If the boiler needs new settings after repairs have been made, the gas valve changed, or after a conversion from methane to LPG, proceed as follows.

⚠ The adjustments indicated in this section must be carried out in the indicated sequence, and must only be performed by qualified personnel.

- Remove the front panel in order to access the internal part of the boiler
- With the boiler on, simultaneously press the heating function's "+" and "-" buttons for 5 seconds

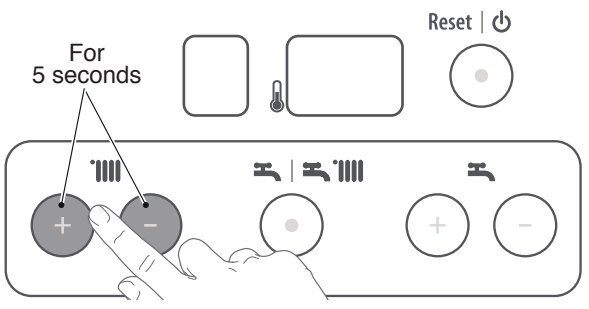

Fig. 38

- The letter "t" will appear on the display, and the boiler will set itself to "TEST" mode

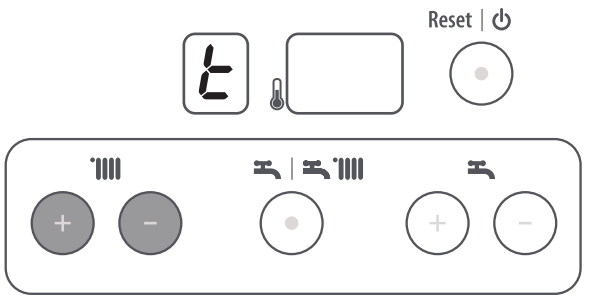

Fig. 39

- Press the heating function's "+" button: the burner's power level will be set to maximum
- Turn the adjustment screw (1) to adjust the combustion, and bring the CO_2 to the values indicated in the table

VERVE i 50

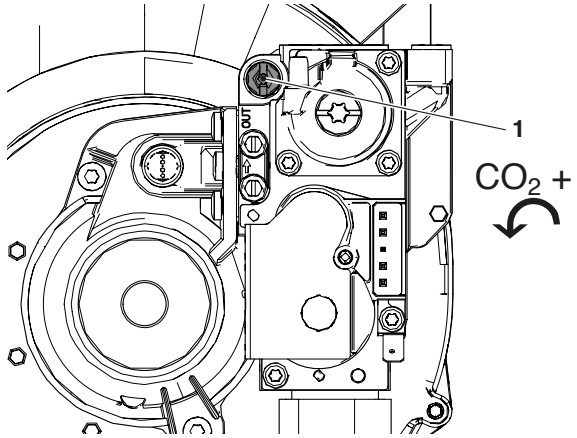

Fig. 40

- Press the heating function's "-" button: the burner's power level will be set to minimum. Turn the adjustment screw (2) to adjust the combustion, and bring the CO_2 to the values indicated in the table

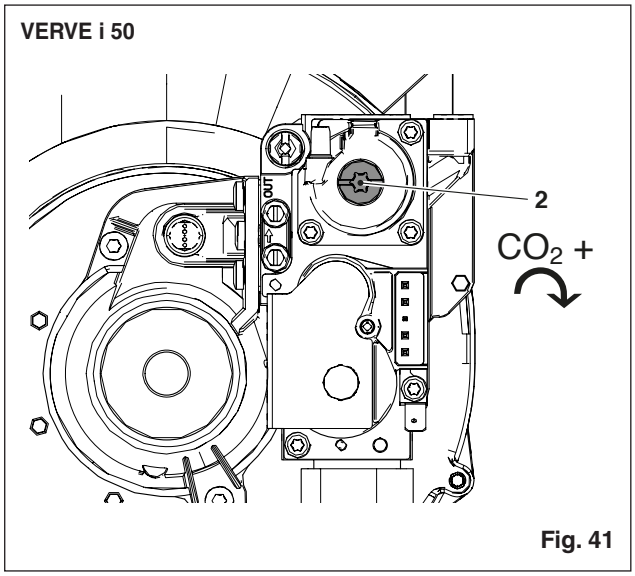

Fig. 41

The following table shows the CO_2 values for Methane and LPG, at the maximum and minimum power levels.

	Natural gas	LPG
Maximum output	9.0 - 9.2	10.5-11.0
Minimum output	9.0 - 9.2	10.5-11.0

4.7 Changing Gas - Methane-LPG transformation

The boiler is predisposed for use with methane gas.
This predisposition can only be modified using the transformation kit supplied by the manufacturer.
The modification can only be performed by the authorized Technical Assistance Centre, using the following procedure.

- Shut off the boiler's electrical power supply and close the gas valve.

⚠ The electrical power supply must be disconnected using the omnipolar switch, which must be installed outside the boiler during the appliance's installation phase.

⚠ While shutting off the boiler using the ON/OFF button on the control panel renders the appliance inactive, its components are nevertheless still receiving electrical power.

- Insert the appropriate "A" diaphragm

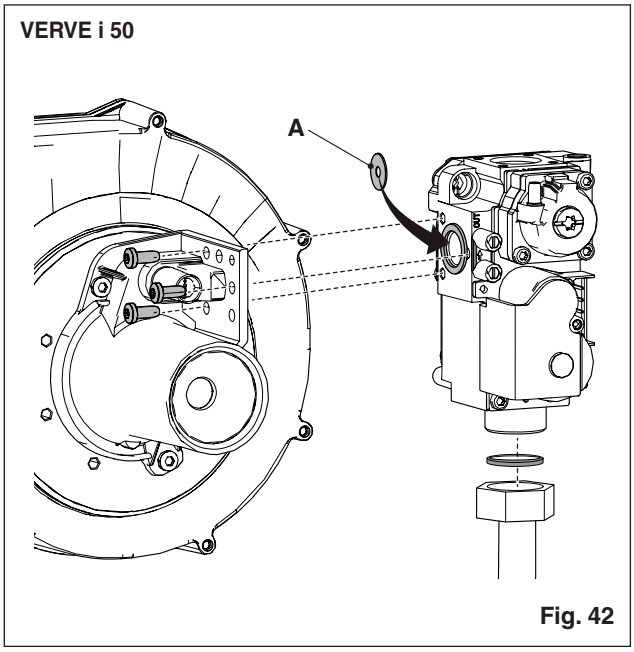

Fig. 42

- Perform the proper setting of the P0 jumper (see J3 in Fig. 7), as indicated in the following table, based on the relative gas

Natural gas	LPG
P0	P0

- Reactivate the electrical power supply and the gas supply, and turn on the boiler
- Perform the adjustment as described in the section " Adjustments".

Vokèra

5 MAINTENANCE

It is mandatory to perform maintenance and cleaning of the device at least once a year.
This operation, carried out by Technical Assistance Centre or by professionally qualified personnel, is necessary to monitor and ensure that the flue pipes inside and outside of the device, the fan, the safety valves, the condensate removal devices, the water drainage tubes and all the measurement and control devices are in perfect working order.

⚠ Before carrying out any maintenance or cleaning, disconnect the power from the device by turning off the bipolar main switch and closing the main gas valve. In addition, for all maintenance (to be carried out at least once a year, as noted above) always replace all the flue and gas seals, in particular the burner seals.

Perform the following operations before beginning any maintenance:
- Switch the electricity supply OFF at the mains power switch and turn the control panel function selector to ⏻ (OFF)

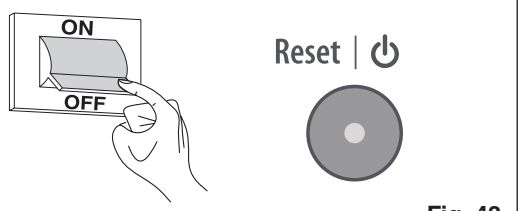

Fig. 43

- Close all external fuel shut-off cocks.

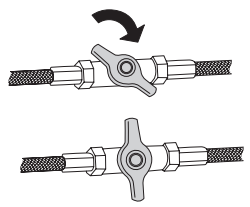
Fig. 44

The external panels and control panel must be cleaned using cloths moistened with soap and water.
To remove stubborn marks, use a cloth damped in a 50% mix of water and denatured alcohol or a suitable cleaning product.
Carefully dry after cleaning.

⛔ Do not use abrasive products, petrol or triethylene.

5.1 Routine maintenance

This normally means the following tasks:
- removing any oxidation from the burner
- removing any scale from the heat exchangers;
- removing any residues from the condensate drainage pipe;
- checking and cleaning the drainage pipes;
- checking the external appearance of the boiler
- checking the ignition, switch-off and operation of the appliance, in both domestic water mode and heating mode
- checking the seal on the gas and water couplings and pipes
- checking the gas consumption at maximum and minimum output;
- checking the position of the ignition-flame detection glowplug
- checking the gas failure safety device.

5.2 Extraordinary maintenance

These tasks restore appliance operation in accordance with the design and regulations - e.g. following the repair of an accidental fault.
This normally means:
- replacement
- repair
- overhaul of components.

These tasks require special means, equipment and tools.
During the initial installation phase, or in the event of extraordinary maintenance, it is recommended to discharge the air from the heating circuit and the boiler, see section Eliminating the air from the heating circuit and boiler

5.3 Checking the combustion parameters

To carry out the combustion analysis, proceed as follows:
- insert the analyser's probes into the flue gas (A) and air (B) inlets on the boiler, after having removed caps (C) and (D).

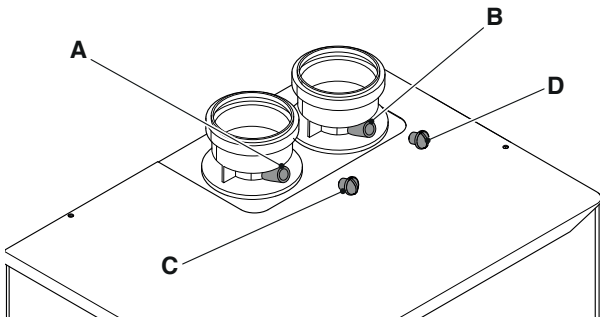

Fig. 45

⚠ The flue gas analysis probe should be inserted until its reaches the stop.

- Tighten the analyser's sealing screw in the flue gas analysis inlet hole
- Calibrate the boiler as described in the section "Adjustments".
- Remove the probes from the analyser, and reapply the previously removed caps.

⚠ Even during the combustion analysis phase, the function that switches the boiler off when the water temperature reaches the maximum limit (about 90°C) remains enabled.

6 PROGRAMMING

- In order to access programming mode, press the summer/winter Button (3) for 4 seconds.

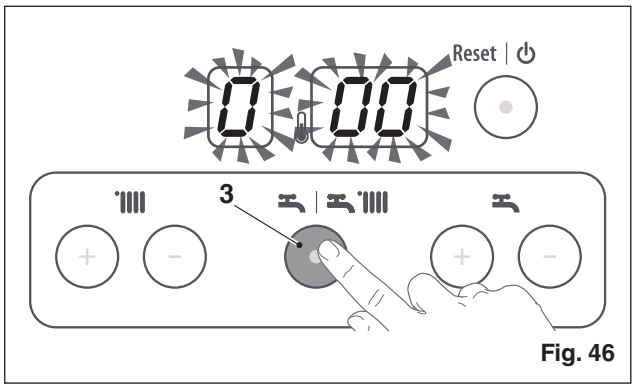

Fig. 46

The display will flash while waiting for the password to be entered.
There are 3 different levels:
- Installer
- Factory
- Monitor

6.1 Installer Level

- Access programming mode by pressing the summer/winter Button (3) for 4 seconds
- Press the "+" and "-" heating Buttons (2) to enter the Installer password **"03"**
- Press the summer/winter Button (3) once to confirm

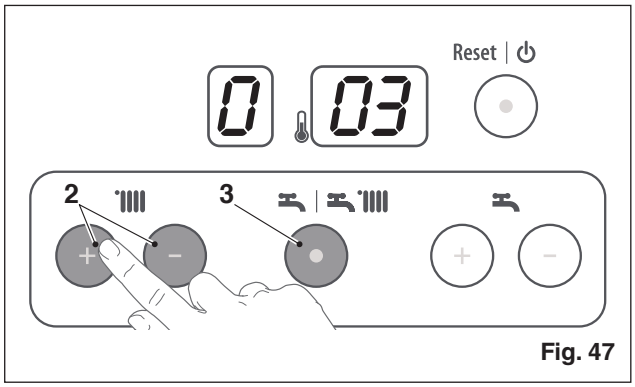

Fig. 47

If the password is incorrect, the system will return to standard mode.
The installer level has been accessed, the user will be able to view and modify certain parameters. The first digit will display a letter followed by the parameter number.
- Press the "+" and "-" heating Buttons (2) to scroll through the parameters

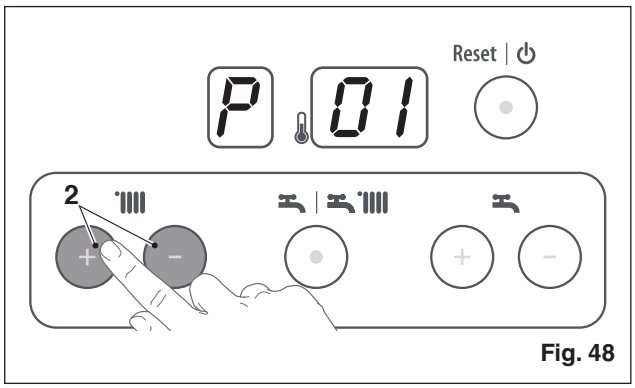

Fig. 48

The selected parameter number will appear in alternation with the set value. The value assigned to the selected parameter is shown in the two digits on the right.

- Press the "+" and "-" domestic hot water Buttons (4) to modify the parameter's value until the desired value is obtained

The new value will begin to flash

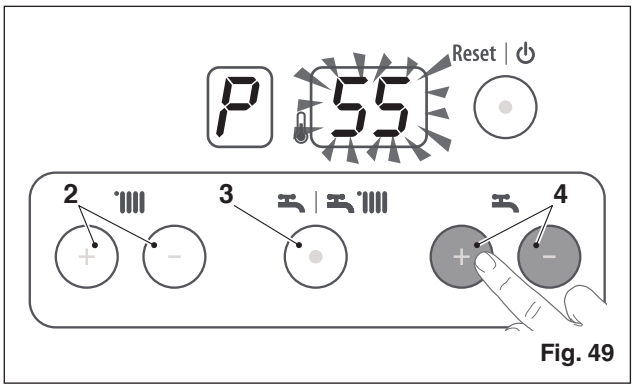

Fig. 49

- Press the summer/winter Button (3) to confirm, or else the"+" and "-" heating Buttons (2) to cancel

6.2 Factory Level

Everything is the same as in the previous case, but with a factory password that allows the user to access the protected parameters.

6.3 Monitor Level

The Monitor level allows the user to view the values assigned to the probes one at a time (see the table below).
- Press the summer/winter Button (3) for 4 seconds
- Press the summer/winter Button (3) again

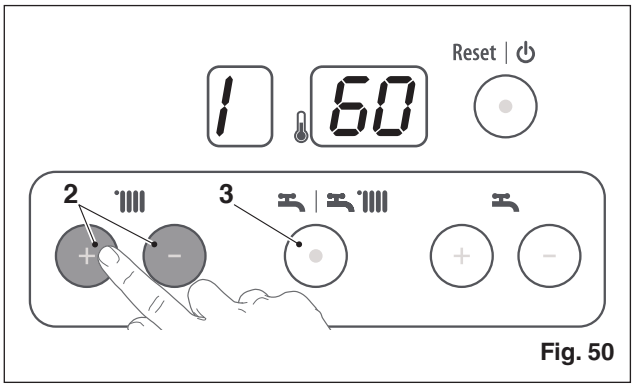

Fig. 50

The first value, which corresponds to the delivery temperature, will appear on the display.

- Press of the "+" and "-" heating Buttons (2) to scroll through all the available values

Displayed values	Digit 1	Digit 2-3
CH flow temperature	1	Value
Return temperature	2	Value
Domestic hot water temperature	3	Value
Outdoor sensor temperature	4	Value
Flue gas temperature	5	Value
2nd circuit temperature	6	Value
Fan speed	7	Value
Ionization	8	Range 70-100

6.4 Parameter List

Nr.	Description	Lower limit	Upper limit	Default values	Specifications
1	1st circuit maximum heating temperature	10°C	80°C	80°C	Maximum heating temperature on the 1st circuit. This is the maximum value for the 1st circuit in climate control mode.
2	Minimum heating temperature	10°C	80°C	45°C	1st circuit minimum heating temperature. This is the minimum value for the 1st circuit in climate control mode.
3	Maximum outdoor temperature	-15°C	25°C	18°C	Maximum outdoor temperature with climate control probe. Minimum heating temperature.
4	Minimum outdoor temperature	-15°C	25°C	0°C	Minimum outdoor temperature with climate control probe. Maximum heating temperature.
5	2nd circuit maximum temperature	Par. 6	50°C	44°C	Maximum heating temperature on the 2nd circuit. This is the maximum value for the 2nd circuit in climate control mode.
6	2nd circuit minimum temperature	10°C	50°C	20°C	2nd circuit minimum heating temperature. This is the minimum value for the 2nd circuit in climate control mode.
7	Domestic hot water set point	10°C	70°C	60°C	Domestic hot water T3 set point
8	Maximum delivery temperature (T1) in domestic hot water mode	10°C	85°C	82°C	Maximum temperature of the primary circuit T1 in domestic hot water mode.
9	Anti-freeze protection on outdoor Temperature (T4). Always enabled when the delivery Temperature T1 is less than 5°C	-15°C	15°C	3°C	Function enabled on T4. If T4 is less than this value, or T1 is less than 5°C, the 1st circuit's pump is activated. If after 10 min. the T1 value has not exceeded 5°C, the burner is activated at max. output power, and shuts off once the T1 value has exceeded 20°C. If after 10 minutes the T4 parameter is still below this value, but T1 is greater than 5°C, the pump will remain in function until T4 exceeds this value
10	Outdoor temperature correction	-30°C	30°C	0°C	Outdoor temperature correction value.
11	1st circuit attenuation	0 = (enabled when the TA is open)	70°C	0°C	The T set only decreases this value with the attenuation function if the room thermostat's contact is open. E.g. 1= 1°C reduction from the calculated set.
12	OT Remote Control Deactivation	0	1	0	0 = remote control enabled 1 = remote control disabled
13	2nd circuit attenuation	0°C	70°C	0°C	The T set only decreases this value with the attenuation function if the room thermostat's contact is open. E.g. 1= 1°C reduction from the calculated set.
14	Post-circulation pump	0 = (seconds x 10)	99 = (seconds x 10)	30	This is the post-circulation time, after which there is no burner ignition request. 99 = Pump always in function
15	1st heating circuit modulation differential for igniting the burner.	0°C	20°C	7°C	The burner is activated when T1 is less than the differential set here.
16	1st heating circuit burner shutoff differential	0°C	20°C	3°C	The burner shuts off when T1 exceeds the setpoint + the differential set here.
17	2nd circuit burner ignition differential	1°C	30°C	3°C	The burner is activated when T2 is less than the differential set here.
18	Heating circuit pause time	0s.	99 = 1 sec. x 10	6	When the burner shuts off in heating mode, it reignites after the time set here, both after the intervention of the flow sensor and after the intervention of the room thermostat.
19	Pause time between domestic hot water mode and heating mode	0s.	99 = 1 sec. x 10	6	Following a domestic hot water request, the burner will ignite after the time set here if there is a heating request. 0 = immediate burner ignition 1 = sec. x 10.

Nr.	Description	Lower limit	Upper limit	Default values	Specifications
20	1st circuit heating mode	0	2	0	0 = Climate control function not enabled (even with the T4 outdoor sensor present) 1 = Climate control function enabled with the T4 outdoor sensor present (automatic detection) 2 = Permanent request even without T.A.
21	2nd circuit heating mode	0	1	0	0 = Climate control function not enabled (even with the T4 outdoor sensor present) 1 = Climate control function enabled with the T4 outdoor sensor present (automatic detection)
22	Differential between T1-T2 for the modulation of the burner to minimum	0°C	40°C	40°C	If the difference between T1-T2 is greater than this value, the burner will modulate to minimum. If the difference between T1-T2 exceeds this value + 5°C, the burner will shut off and the pump's post-circulation will be activated.
23	Domestic hot water mode	0	3	3	0 = Rapid heat exchanger with NTC3 probe 1 = Rapid heat exchanger without NTC3 probe (Controlled by the NTC2 probe) 2 = Storage cylinder with NTC3 probe 3 = External heat request (Via thermostat)
24	Pump modulation	0°C	40°C	20°C	Pump modulation with the aim of maintaining the delta-T set here.
25	2nd circuit Delta_T	1°C	35°C	7°C	Only when the 2nd circuit is enabled. The modulation is applied to the return temperature. T_return_set=setpoint_2nd_circuit - Delta_T_2nd circuit E.g.= Set-point 2nd circuit 45°C . Delta_T 7°C. The burner starts to modulate when the return temperature is greater than 38°C, 45-7=38°C.
26	Not used	1s.	100s.	6s.	Three-way valve aperture time.
27	Domestic hot water activation differential "on"	- 4°C	10°C	- 3°C	
28	Domestic hot water shut off differential "off"	4°C	10°C	5°C	
29	Reset default values	0 = off	1 = on	-	If this value is set to 1, all the default values can be reset by pressing the **Mode** button.
32	Maximum Power in heating mode	0,3	1	1	
41	Storage cylinder differential on	1°C	10°C	5°C	Storage cylinder domestic hot water activation differential.
42	Storage cylinder differential off	1°C	10°C	0°C	Storage cylinder domestic hot water shut off differential.
43	Semi-storage differential "on"	- 1°C	10°C	5°C	Not Enabled.
44	Semi-storage differential "off"	- 1°C	10°C	0°C	Not Enabled.
46	Modulating pump mode	1	4	4	Modulating pump setting: 1) modulating pump 2) minimum pump speed (on-off) 3) medium pump speed (on-off) 4) maximum pump speed (on-off)
53	Domestic hot water circuit pre-heating mode N.B. Function included on DataSheet48 since March 2011. 2nd generation boilers	0	2	0	It is possible to activate the pre-heating function: this function allows the domestic hot water side primary circuit to be kept at temperature. This shortens the waiting time for drawing domestic hot water. 0 = Pre-heating function not enabled 1 = Enabled with set-point Par.54 2 = Enabled with set-point Par54+domestic hot water set-point E.g. Par.54 /35°C + Set-point DHW40°C. 35+40=75°C. The primary circuit (domestic hot water side) will be maintained at 75°C.
54	Domestic hot water set-point pre-heating function	10	70	70	This is the temperature to be maintained for the primary circuit (domestic hot water side) without any requests. When the temperature drops below this value (Par.54) by 5°C, the burner turns on and shuts off once the set-point temperature (Par.54) has been exceeded by 1°C.
55	Standby time after domestic hot water request	0	5	0	Burner ignition delay time after domestic hot water request.

Vokèra BY RIELLO

2012222 - Rev. 3 (07/17)

Registered address:
Vokèra Ltd
Borderlake House
Unit 7 Riverside Industrial Estate
London Colney
Herts AL2 1HG

enquiries@vokera.co.uk

www.vokera.co.uk
www.vokera.ie

Sales, General Enquires
T 0844 391 099
F 0844 391 0998

Vokèra Ireland
West Court, Callan
Co Kilkenny
T 056 7755057
F 056 7755060

Vokèra Limited reserve the right to change
specification without prior notice
Consumers statutory rights are not affected.

A Riello Group Company.
Company Reg No: 1047779